XFP NETWORKABLE ANALOGUE ADDRESSABLE FIRE ALARM CONTROL PANEL

Single Loop 16 Zone Version

engineering manual

Approved Document No. DFU1200510 Rev 2

CONTENTS

Important notes **3**

Key features **4**

Installation and wiring **5**
- The fire panel enclosure 5
- Removing the lid and base PCBs 5
- Mounting the base to the wall 6
- Planning the cable layout in the panel 6
- Mains wiring 6
- Connecting Mains to the Power Supply PCB 7
- Analogue addressable loop wiring 8
- Connecting the analogue loop to the Main Control PCB 9
- Conventional sounder circuit wiring 10
- Auxiliary input wiring 10
- Relay output wiring 10
- Remote PC connection 11
- Aux. 24V output 11
- Installing the standby battery supply 11
- Network/repeater wiring (optional) 12

Controls and indicators **14**

Commissioning and programming **16**
- Recommended commissioning procedure 16
- System operation / terms of reference 16
- Access levels menu tree 17
- How to enter access level three 18
- Fitting the panel's NVM 'memory unlock' link 18
- A detailed description of the functions available at access level 19-33

Maintenance **34**

Standby battery calculation guide **35**

Technical specification **36**

Disclaimer

© No responsibility can be accepted by the manufacturer or distributors of this range of fire panels for any misinterpretation of an instruction or guidance note or for the compliance of the system as a whole. The manufacturer's policy is one of continuous improvement and we reserve the right to make changes to product specifications at our discretion and without prior notice. E&OE.

This product has been manufactured in conformance with the requirements of all applicable EU Council Directives.

IMPORTANT NOTES

This equipment must only be installed and maintained by a suitably skilled and technically competent person.

This equipment is a piece of Class 1 equipment and MUST BE EARTHED.

ALWAYS isolate the panel's Mains and battery backup supplies before making connections to its PCBs.

Items supplied with this panel

- Engineering manual (this manual)
- User Manual / Log Book
- Torx key, for unfastening / securing the panel lid
- Electrical accessory pack, containing:
  2 x 6K8 0.25W conventional sounder circuit resistors
  1 x 20mm 1ATH 250V HRC ceramic fuse (spare primary fuse)
  1 x set of battery connection leads (red wire, black wire, jumper link and 2 x nylon cable ties)

System design

Fire alarm system design is beyond the scope of this document. A basic understanding of general fire alarm system components and their use is assumed.

Contact the Fire Officer concerned with the property at an early stage in case he has any special requirements. We strongly recommend that a suitably qualified and competent person is consulted in connection with the design of the fire alarm system and that the system is commissioned and serviced in accordance with the laid down specification and national standards. If in doubt please consult your supplier.

We recommend you read BS 5839: Part 1 "Fire Detection and Alarm Systems for Buildings (Code of Practice for System Design, Installation, Commissioning and Maintenance)" available at your local reference library or from the BSI. Other national standards of installation should be referenced where applicable.

Cable types and limitations

All system wiring should be installed to meet current national standards - in the United Kingdom these are BS 5839 Part 1 and BS7671 (Wiring Regulations).

Fire resistant screened cable should be used throughout the installation. This not only shields the data moving up and down the cables from outside interference but is essential to ensure compliance with EMC regulations. Cables such as FP 200, Firetuff™, Firecel™ and MICC may be acceptable provided they are properly terminated at the fire panel and meet national standards / the system specification as applicable. Consult Clause 26 of BS 5839 Part 1 for more detailed information on cables, wiring and other interconnections.

Equipment guarantee

This equipment is not guaranteed unless the complete installation is installed and commissioned in accordance with the laid down national standards (in the UK BS 5839: Part 1) by an approved and competent person or organisation.

Anti-static handling guidelines
Always observe appropriate electro-static handling precautions prior to handling the panel's PCBs or any other static-sensitive components.

KEY FEATURES

This single loop 16 zone analogue addressable fire alarm panel offers the following features:

- Full compliance with EN54 parts 2 and 4, including EN54-2 Clauses 7.8 - Output to fire alarm devices, 8.3 - Fault Signals from points and 9.5 - Disablement of addressable points.
- Full compatibility with Hochiki's ESP and Apollo's XP95, Discovery and Xplorer protocols (dependent on the model purchased)
- Two independently programmable conventional sounder circuits
- Two programmable inputs
- A fault output relay and three programmable relay outputs with volt free changeover contacts
- A selection of zone dependency functions (EN54-2 Clause 7.12, type A, B or C) as detailed below:

  Type A - If there is an alarm from a detector, the panel will look for a confirmatory alarm from the same or another detector in the same zone before a full alarm is established. If there is no confirmatory alarm, the first alarm will automatically reset.

  Type B - As type A except the confirmatory signal must be from another detector in the same zone.

  Type C - As type A except the confirmatory signal may also be from another zone, and the first alarm will not automatically reset.
- A day/night (building occupied/unoccupied) function (engineer programmable day/night changes include detector sensitivity (high/low) and zone dependency settings
- An investigation delay period function (programmable for length of time, which zone(s) it applies to and whether or not it operates in day/night mode) which works as follows:
  When there is an alarm in a zone programmed to operate in 'investigate' mode, the full alarm condition will occur after a delay. It is possible to manually impose a further delay, to allow the source of the alarm to be investigated. If the second delay expires, or there is another alarm in the same zone, then a full alarm condition is established. During either delay period, the panel may be reset in the case of a false alarm
- Individual sensitivity settings for each device
- EN54-2 Clause 7.11 Delays to outputs, and a phased evacuation facility
- An EN54-2 Clause 7.13 alarm counter to record the number of times the panel has been in an alarm state
- A powerful short circuit protected loop driver, capable of supporting a total of 126 addressable devices
- An integral 1.4A EN54-4 switch mode PSU rated @ 185-260V a.c. 50/60Hz
- Earth fault monitoring
- Keypad access code to access levels 2 & 3. Keyswitch entry to access level 2.
- 40 characters of custom text per device
- 500 event monitoring
- Comprehensive EN54-2 Clause 10 test, with maintenance and commissioning functions
- An intuitive Windows based upload-download PC program (Part No. XFP507) that **MUST** be used to configure the system

Networking

If required, the panel can be configured to sit on network of up to eight interconnected XFP master panels or it can have up to eight XFP repeaters connected to it. If you wish to utilise either of these options, the panel will require a separately available Network Communication Card (Part No. CFP761).

INSTALLATION AND WIRING

The fire panel enclosure

The panel is supplied with a plastic detachable lid, a plastic back box, a Main Control PCB and a Power Supply PCB. Space is available inside the panel for the rated capacity of VRLA backup batteries and an optional Network Communication Card.

The panel must be sited indoors in an area that is not subject to conditions that are likely to affect its performance, e.g. damp, salt-air, water ingress, extremes of temperature, physical abuse, near sources of electromagnetic interference, such as high current machines, welding equipment, radio transmitters, etc. See Page 36 for more details. It should be sited at a height where it is easily accessible and in a prominent position within the building. Ideally, its front panel indicators should be at eye level.

Typical locations for the panel are in the entrance foyer/hallway at ground floor level (the first and most obvious point of contact for emergency services) or a permanently manned security office.

It is recommended that you remove the panel's lid and base PCBs prior to first fix installation to protect the electronics from damage.

Removing the lid and base PCBs

Fig. 1 : Location of the panel's base PCBs and removal details

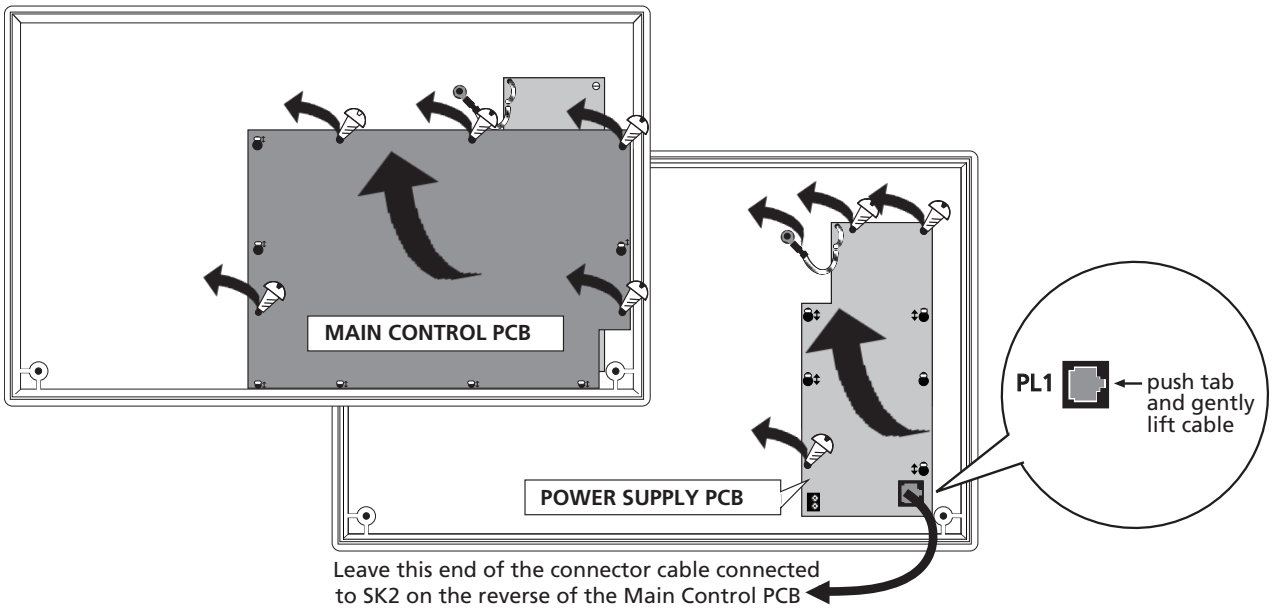

1 Take the panel out of its box and undo the two lid screws using the Torx key provided. Remove the lid to expose the Main Control PCB (the Power Supply PCB is located underneath).

2 Carefully remove the five retaining screws on the Main Control PCB and slide the PCB up and over the mounting pillars, taking care not to damage any of the components.

3 Disconnect the telecoms-style connecting cable at PL1 on the Power Supply PCB, making sure that the cable remains connected to the reverse of the Main Control PCB to prevent it being misplaced.

4 Pull the Power Supply's earth strap off the spade connector at the base earth point.

5 Carefully remove the three retaining screws on the Power Supply PCB and slide the PCB up and over the mounting pillars, again taking care not to damage any of the components.

6 Store the PCBs in a clean, dry place which is free from vibration, dust and excessive heat. Retaining the PCBs in a suitable cardboard box will also guard them against mechanical damage.

Mounting the base to the wall

The panel can be surface or semi-flush mounted using the five mounting holes provided (see Fig. 2 below). To expose the mounting holes you must first remove the panel's lid and base PCBs, as described on page 5. The mounting holes are suitable for use with No.8-10 or 4-5mm countersunk screws. Always assess the condition and construction of the wall and use a suitable screw fixing. Any dust or swarf created during the fixing process must be kept out of the base. Note that the central mounting hole can be used to temporarily hang the back box so it can be levelled and its remaining fixing points marked for drilling.

Fig. 2 : Location of mounting holes and drill points / side view of panel for flush mounting

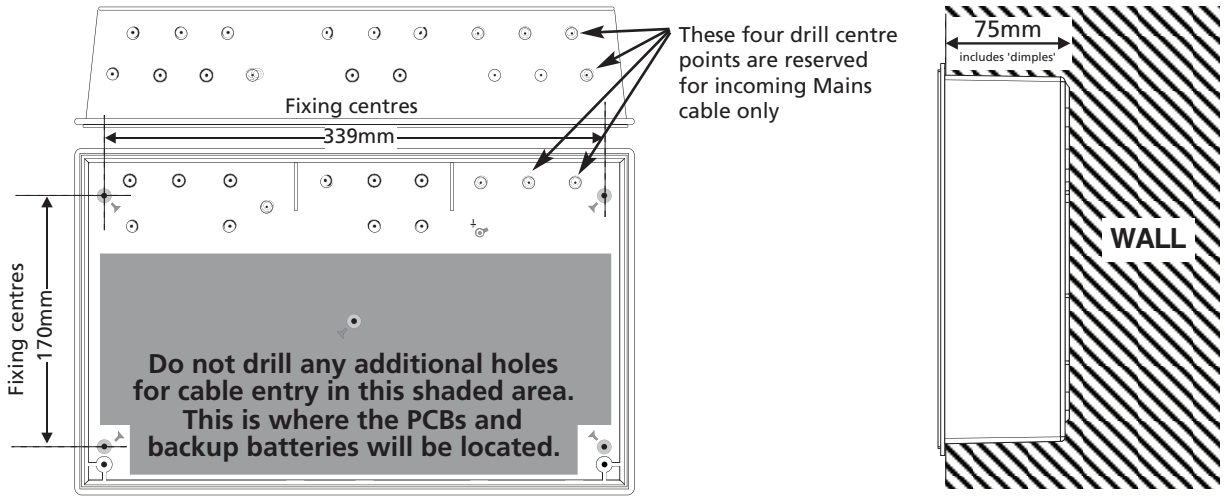

Planning the cable layout in the panel

All cables should be brought into the panel via the drill outs provided.

Note that the analogue loop and conventional sounder circuit cabling is classed as low voltage and must be segregated away from Mains voltages. Careful planning is needed to ensure this (see Fig. 2 above for guidance).

We recommend tails of at least 20-30cm are left inside the panel to ensure straightforward connection of the field wiring to the panel's terminals.

Drill centre points are provided in the panel base to aid drilling tools. Cut out suitable holes in the panel using a hole saw directed by a pilot bit in the centre of the hole saw (see right). Always ensure that if a hole is cut out it is filled with a good quality cable gland. Any unused holes must be securely blanked off.

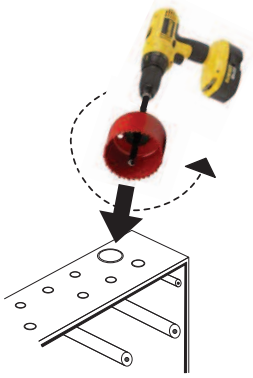

Mains wiring

The requirement for the Mains supply to the fire panel is fixed wiring, using three core cable (no less than 1mm^2 and no more than 2.5mm^2) or a suitable three conductor system, fed from an isolating switched fused spur, fused at 3A. This should be secure from unauthorised operation and be marked 'FIRE ALARM: DO NOT SWITCH OFF'. The Mains supply must be exclusive to the fire panel.

(As an alternative to a switched fused spur, a double pole isolating device may be used providing it meets the appropriate national wiring regulations - see diagram below.)

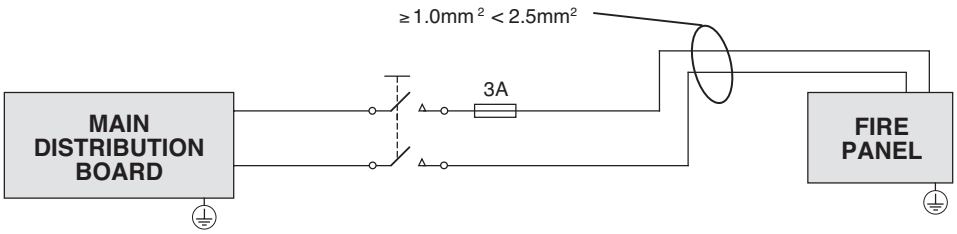

Connecting Mains to the Power Supply PCB

The panel's PSU is a 185-265Va.c. 50-60Hz off line switched mode power supply that combines the functions of a power supply unit, battery charging unit, battery monitoring unit and earth fault monitoring unit. It should be positioned in the panel's enclosure as shown in Fig. 3 below. DO NOT operate the panel without the Power Supply PCB correctly mounted in the enclosure with its three PCB retaining screws securely tightened.

***DO NOT** connect Mains to the Power Supply PCB until the installation is complete and ALL relevant PCBs are correctly attached within the panel.*

Fig. 3 : Power Supply PCB layout and Mains connection details

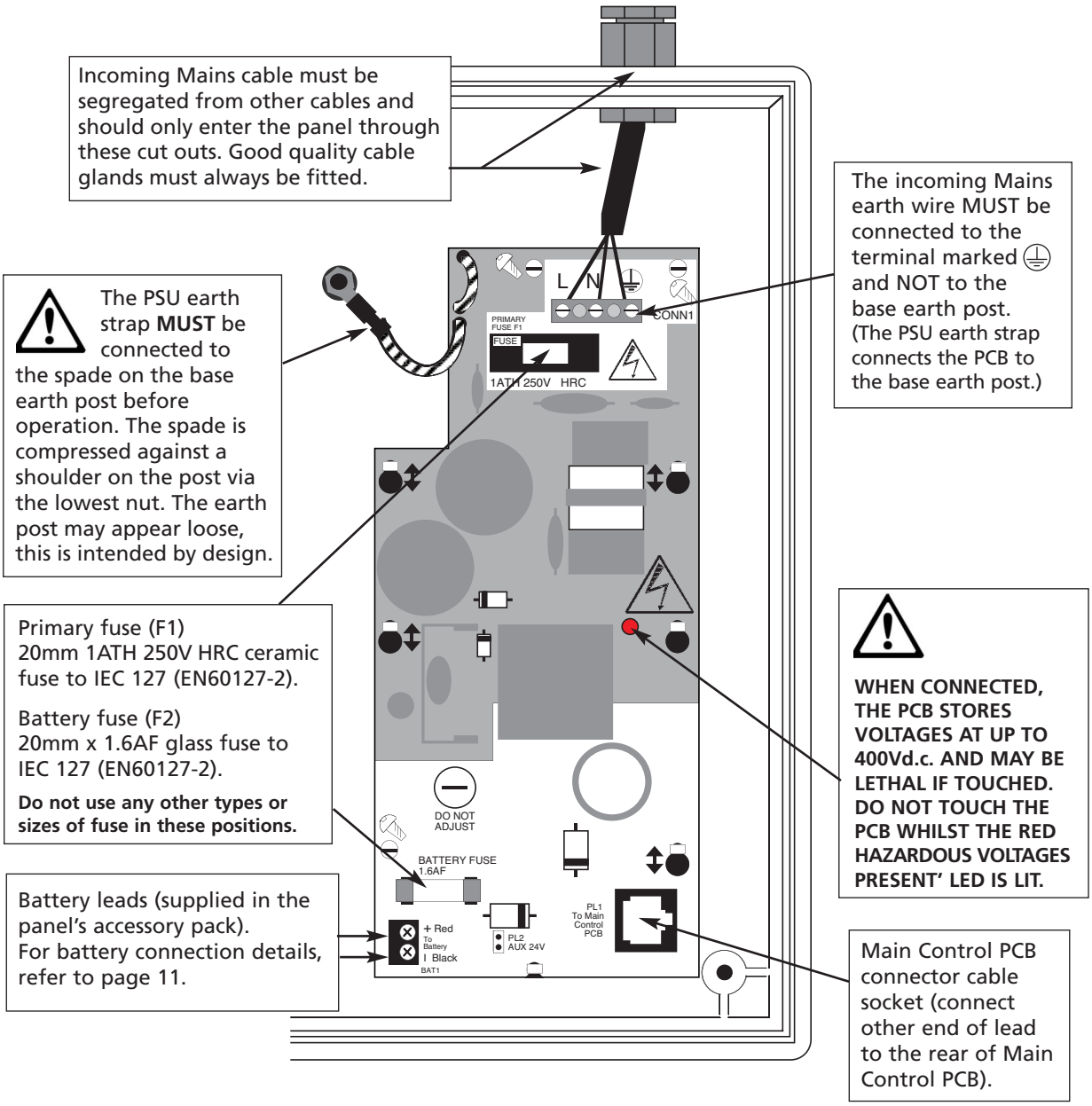

Analogue addressable loop wiring

Fig. 4 below shows a typical analogue addressable loop complete with loop isolators, detectors, loop-powered sounders, modules and monitors. The descriptions and availability of the devices shown may not be applicable to all manufacturers' protocols – check with your supplier for further details. Also this example arrangement of devices may not be permitted by design and installation regulations in certain countries. The loop should be connected to the relevant 5mm connector block on the panel's Main Control PCB and its screens terminated at the panel's base earth post as shown on page 9.

Fig. 4 : A typical analogue addressable loop

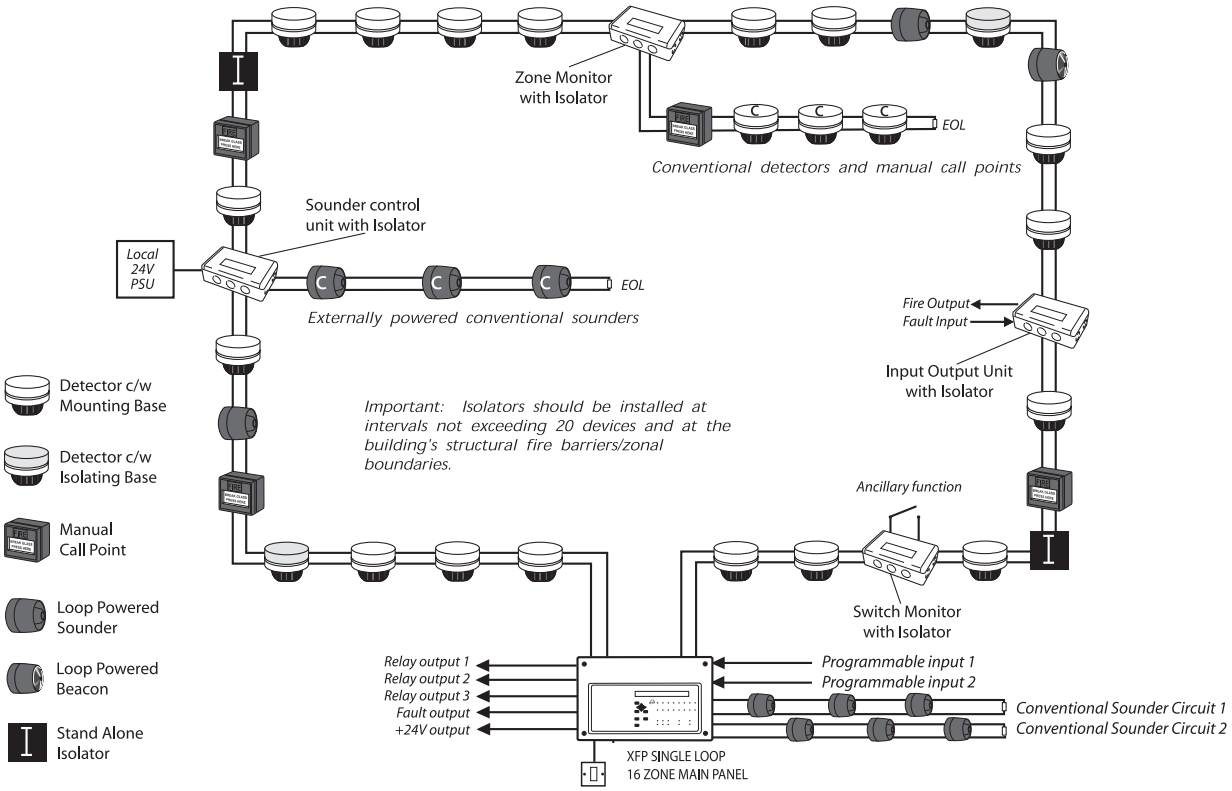

Design issues - reducing faults and their consequences

To ensure a reliable system, it should be designed and maintained to local design and installation regulations. The XFP has loop isolators included in the panel, and loop isolators should be included in the loop wiring. A single short circuit fault will now only disable devices in the section of wiring between isolators. Local design and installation regulations will dictate how many devices or zones may be lost in the case of this type of fault. In the case of a single open circuit no devices will lost, since communication is from both ends of the loop, but a loop integrity fault will be shown.

Note that a critical design issue with any analogue fire system is the combined effect of loop resistance, loop capacitance and the current demand of items connected to the loop.

Factors that influence this include loop length, cable diameter, cable type, the number of isolators used and the number and type of devices between isolators. There are no hard and fast rules regarding these factors as every situation is unique. However, if the following conservative advice is followed, the loop WILL almost certainly work.

- **Absolute maximum loop length = 1km, with either 1mm^2 or 1.5mm^2 cables.**
- **No more than 20 addressable devices between loop isolators of which no more than 6 are loop sounders.**
- **If loop sounders are used, use 1.5mm^2 cable and do not fit more that 32 loop sounders per loop in total.**
- **If more than 10 loop sounders are used per loop then the maximum loop length per loop should be no greater than 750m.**

The above **SHOULD NOT** be considered the maximum operating conditions for the panel as many other permutations are possible. Any limitations are a consequence of device manufacturers' protocol, coupled with the cable's characteristics. The panel's loop driver is easily capable of driving lightly loaded loops up to 4 km long without a problem. However, devices connected at the end of 4 km may not be able to read the data once corrupted by the cable. Always refer to the instructions supplied with each device prior to installation.

Connecting the analogue loop to the Main Control PCB

The analogue loop should be connected to the Main Control PCB as illustrated in Fig. 5 below. Remember to isolate the panel's Mains and battery backup supplies before making any connections.

The loop's earth screens should be adequately insulated and connected between the nut and washers on the base earth post using eyed crimp connectors. Do not disturb the lower nut - this must be secure to ensure earth continuity.

The base earth post is provided for terminating earth screens or drains and is NOT the main earthing point. The installer must review the external earth bonding (if required) with respect to the national wiring rules. If the installation requires protective earth bonding, then this must be applied externally and in conjunction with the type of earthing system employed on site.

Note that the Main Control PCB connects to the Power Supply PCB via an 8-way telecoms-style connector cable, the socket for which is located on the PCB's reverse. This cable **must** be connected before the Main Control PCB is secured in the panel. Ensure all six PCB retaining screws are properly tightened before operation as they play an important part in the electrical safety and EMC immunity of the panel.

Fig. 5 : Typical analogue addressable loop connection

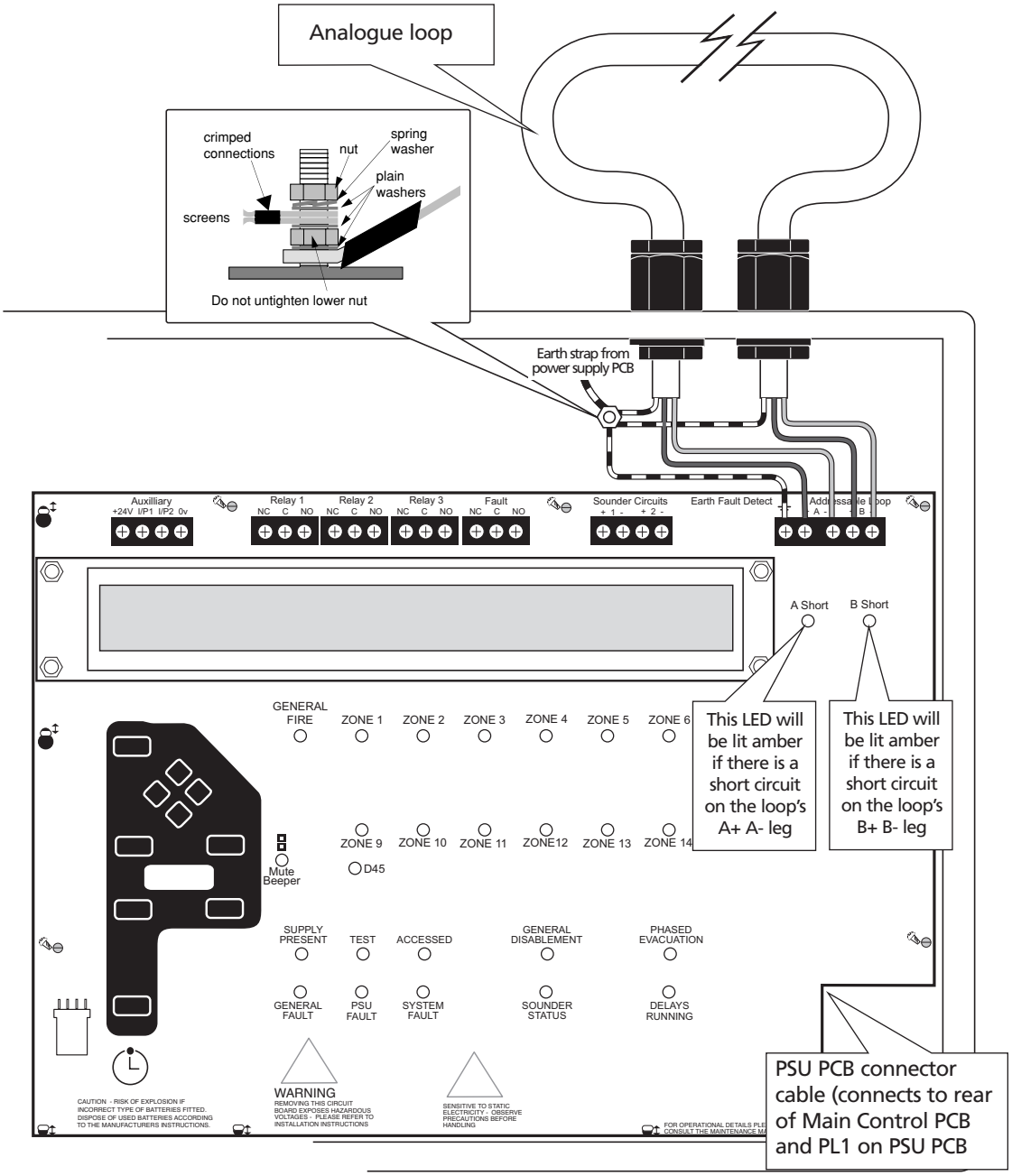

Conventional sounder circuit wiring

Two conventional sounder circuits are provided. These can accommodate up to 40 conventional polarised sounders (at 20mA) or 32 bells (at 25mA) per system. If a full complement of sounders or bells are to be used, split them equally across both circuits. A 6k8 end of line resistor (provided) must be connected at the end of each sounder circuit to allow the wiring to be monitored. If the sounder circuit is unused, you must still connect the 6k8 resistor at the panel. Remember to isolate the panel's Mains and battery backup supplies before making any connections.

Each sounder circuit should be connected to the terminal marked **Sounder Circuits** on the Main Control PCB as shown in Fig. 6 below and its earth screens terminated at the panel's base earth post.

Fig. 6 : Typical conventional sounder circuit connection and detail

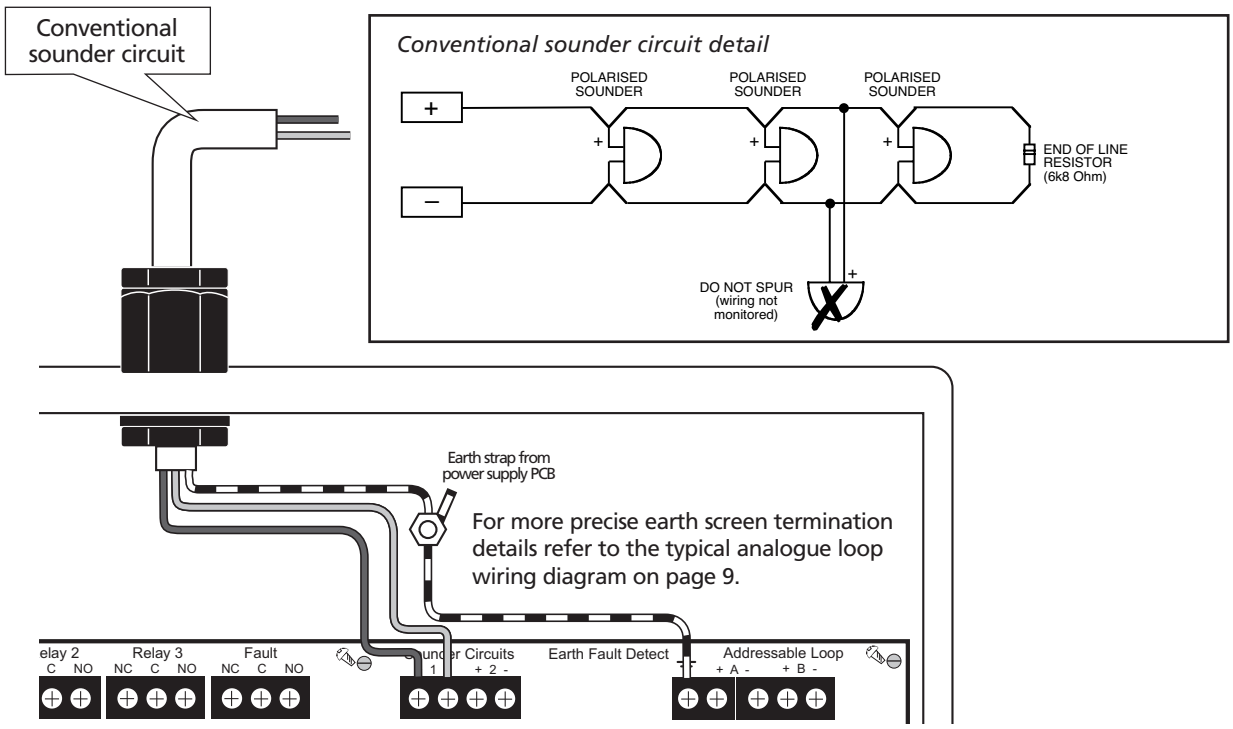

Auxiliary input wiring

Two programmable auxiliary input connections are provided. These can be programmed using the panel's PC programming software tools to operate as required. The wiring for each input should be connected to the terminal block marked **Auxiliary** on the Main Control PCB as shown in Fig. 7 right. Remember to isolate the panel's Mains and battery backup supplies before making any connections.

If applicable (i.e. in electrically noisy environments), input wiring screens should be terminated at the panel's base earth post in the same way as the analogue loop earth screens, as detailed on page 9.

Fig. 7 : Typical auxiliary input wiring / connection

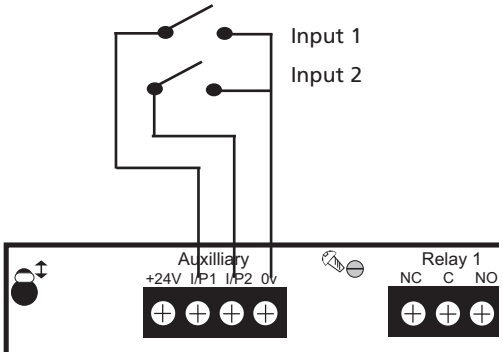

Relay output wiring

Four volt-free relay output connections are provided - a failsafe fault output, which switches for any fault condition, and three programmable auxiliary relay outputs. All four relays are capable of switching 1A @ 30Vdc. They should NOT be used for switching Mains voltages.

The three auxiliary outputs (Relays 1, 2 and 3) can be programmed using the panel's PC programming software tools to operate as required but their default operations are:

Relay 1 : Switches when any zone goes into fire, switches back when the panel is silenced;
Relay 2 : Switches when any zone goes into fire, switches back when the panel is reset;
Relay 3 : Has no default operation.

The wiring for each output should be connected to the relevant connector block on the Main Control PCB (remember to isolate the panel's Mains and battery backup supplies before making any connections). Fig. 8 (right) explains how the outputs work.

Fig. 8 : Relay output detail

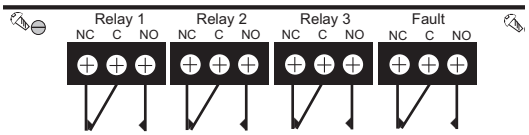

Remote PC connection

A four-way RS232 molex connector is provided on the Main Control PCB for the connection of a Windows based PC for programming purposes. The ONLY way to program this fire panel is using a PC loaded with the panel's sophisticated programming tools (Part No. XFP507). The lead supplied with the software tools should be connected to the panel and the PC as shown in Fig. 9 (right).

Fig. 9 : Connecting a PC to the panel's RS232 connector

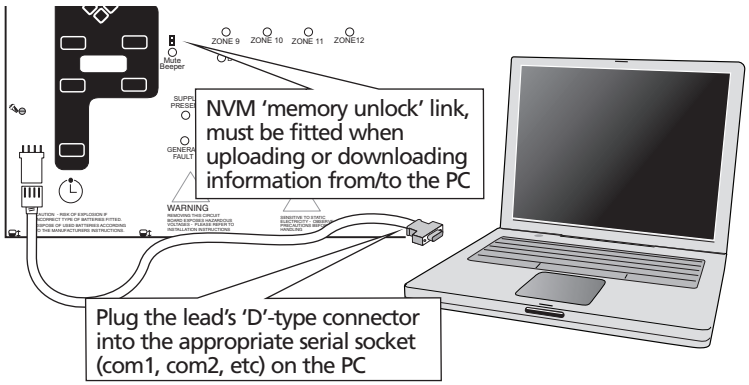

Aux. 24V output

One fused 24V d.c. output, rated at 100mA, is provided and can be used for supplying power to ancillary fire alarm equipment. This input should not be used to power electromagnetic door retainers.

Installing the standby battery supply

Two new, good quality and fully charged 12V valve regulated lead acid batteries are required as the emergency stand-by power supply for the panel. The batteries should be connected in series and located in the panel's enclosure as shown in Fig. 10 below. The battery leads, link wire and nylon cable ties are provided in the panel's accessory pack. Run the battery leads through the slits in the panel's lower plastic ribs and secure the batteries into position using the nylon cable ties as shown.

The panel's sophisticated battery monitoring unit protects the batteries against deep discharge by activating a cut off circuit when the stand-by supply voltage reaches 21V approx. If batteries are not fitted, are discharged or in poor condition, a PSU fault will show at the panel.

The capacity of the batteries used will depend upon the required stand-by time. To calculate the batteries required for any given stand-by period, refer to the battery calculation guide on page 35.

Always dispose of used batteries according to the battery manufacturer's instructions.

Fig. 10 : Battery location and connection details

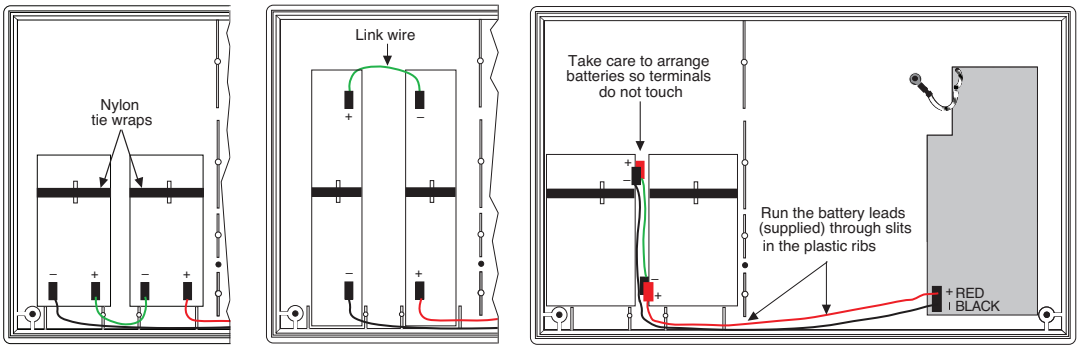

Location of small sized batteries typically 1.2 Ah

Location of medium sized batteries typically 2.1 Ah

Location of large sized batteries typically 3.0 Ah

Connection of leads to Power Supply PCB

Network/repeater wiring (optional)

The XFP's network protocol allows the interconnection of up to eight XFP main panels (any mix of single loop 16 zone XFPs and/or 1 to 2 loop 32 zone XFPs) over a two-wire RS485 network. Alternatively, the network can be used to connect up to eight XFP repeaters to one XFP main panel. It is not possible to mix XFP main panels and repeaters on the same network.

Key features of the XFP's network protocol when used for interconnecting XFP main panels:

- *Allows the interconnection of up to eight XFP main panels (any mix of single loop 16 zone XFPs and 1 and 2 loop 32 zone XFPs)*
- *Up to 1 km of cable may be fitted to an XFP main panel network.*
- *Each networked XFP main panel can be programmed to:*
  Accept Fires from other main panels.
  Accept Faults from other main panels.
  Accept Control actions such as Silence Alarm Sounders and Control Panel Reset from other main panels.
  Accept Disablement commands for zones, sounders and output sets from other main panels.
  (Each of these four functions may be individually selected via the panel's PC Programming Software Tools.)
- *All panels monitor all other panels for network wiring faults.*
- *Fires on remote panels are displayed on local panels including the point description of the alarm's origin.*
- *Faults on remote panels are displayed on local panels.*
- *Cause and effect can be programmed into local panels dependent on which remote panel is in alarm.*
- *The network supports the programming of site information into remote panels from a PC connected at a local panel.*
- *Time and date is common to all panels throughout the network.*

Key features of the XFP's network protocol when used for connecting XFP repeaters

- *Allows the connection of up to eight XFP repeaters (any mix of single loop 16 zone repeaters and 1 and 2 loop 32 zone repeaters)*
- *Up to 500m of cable may be fitted to an XFP repeater network.*
- *Each XFP repeater offers all the functions and controls of an XFP main panel*

Any XFP main panel connected to the network requires the installation of a Network Communication Card (Part No. CFP761), as shown in Fig. 11 below (Repeaters come with a Network Communication Card already fitted). Typical network wiring details are shown in Fig. 12.

Fig. 11: Installing the network communication card

Important: Before installing the network communication card, isolate the Mains supply and disconnect the panel's battery back-up supply. With reference to the diagram below:

- Secure the card inside the panel using the two retaining screws provided.
- Connect the two-way polarised power supply loom (supplied with the card) between PL1 on the card and PL2 on the Power Supply PCB.
- Connect the 8-way telecoms-style connector cable (also supplied with the card) between PL2 on the card and the socket on the reverse of the Main Control PCB (socket SK2 which is located alongside the PCB's microprocessor).

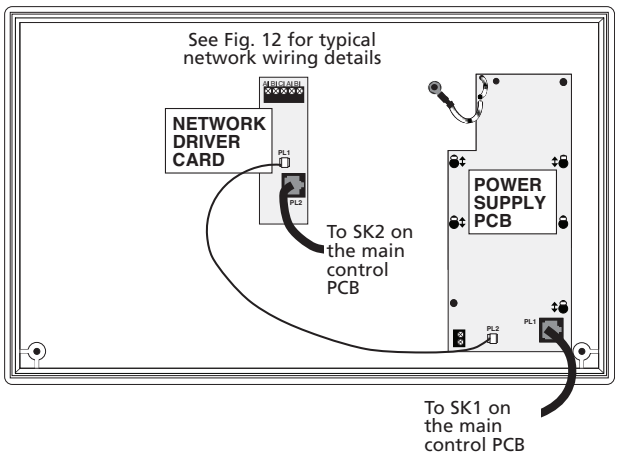

The DIP switch (SW1) on the network communication card has no function when used with the XFP. However, all networked XFP main panels require a unique ID number (1-8) so they can be recognised by other panels on the network and this is assigned using the network functions menu options at access level 3. XFP repeaters do not require an ID number.

Fig. 12: Typical network wiring

The network wiring should be installed to meet BS 5839: Part 1 and BS7671 (Wiring Regulations) and/or other national standards of installation where pertinent - see cable types & limitations, page 3.

Connect A to A, B to B and terminate incoming and outgoing earth screens to terminal C. **Note that earth screens should also be terminated at the base earth post of ONE master panel ONLY, as illustrated below.**

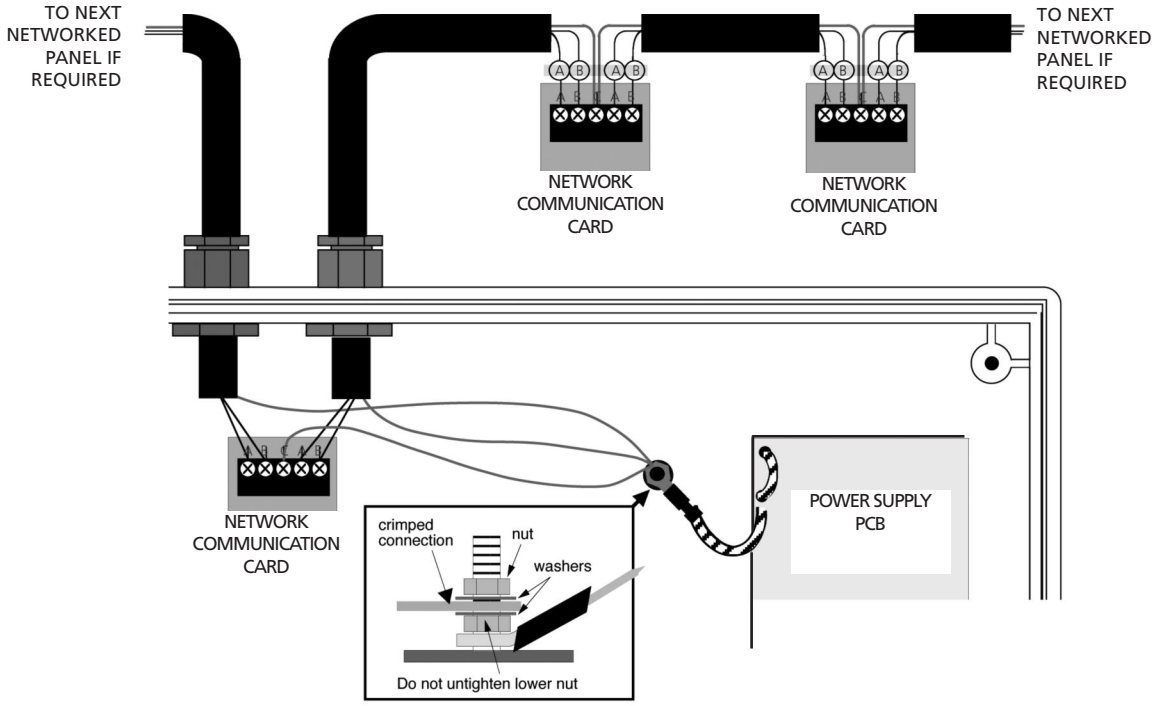

A typical XFP main panel network

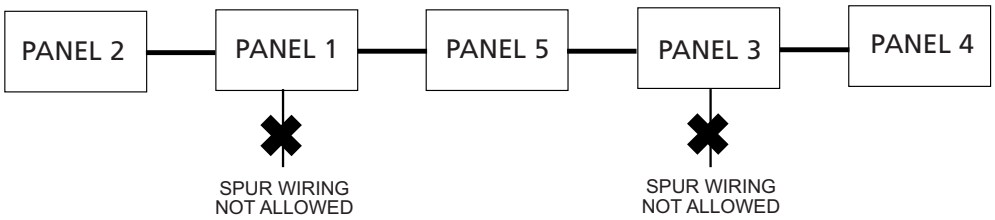

A typical XFP repeater network

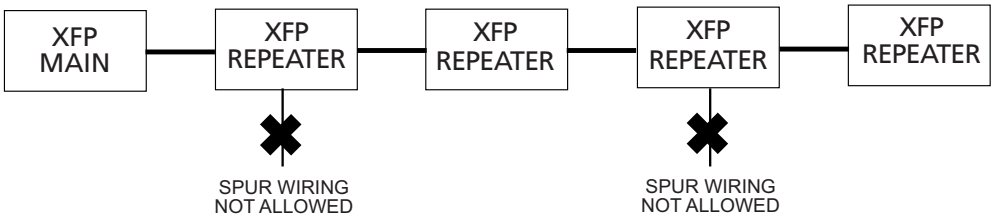

CONTROLS AND INDICATORS

Front panel layout

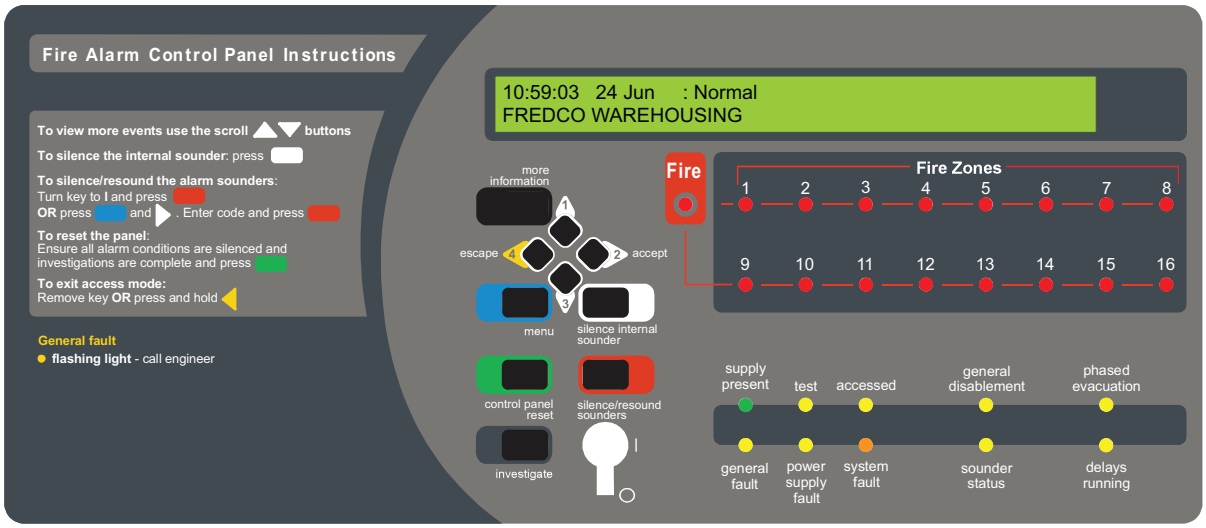

LED Indicators

Liquid Crystal Display	Provides detailed information on the status of the system (the type of messages displayed and what they mean is covered in greater detail in the panel's separate user manual).
(General) Fire	Flashes red when there is a fire condition on any zone and goes steady red when the alarm is silenced. Subsequent fire conditions will restart the (General) Fire indicator flashing until it is silenced again.
Fire Zones (1-16)	One or more of these indicators will flash red in an alarm condition and will go steady when silenced.
Supply Present	Normally lit green to show that all of the panel's power supplies are functioning correctly.
Test	Lit yellow when the panel is in walk test mode. This LED does NOT illuminate for any other test condition
Accessed	Lit yellow when the panel is in access levels 2 or 3.
General Disablement	Lit yellow when one or more zone, sounder, output or relay is disabled.
Phased Evacuation	Flashes yellow when there is a phased evacuation in process.
General Fault	Flashes yellow when there is an fault condition on the panel. Will always be lit in conjunction with at least one other fault LED.
Power Supply Fault	Lit yellow when the panel's power supply or Mains has failed or the panel's standby battery is in poor condition.
System Fault	Lit amber when a system error, such as a microprocessor fault, occurs. Remains lit even if the panel automatically clears the fault.
Sounder Status	Flashes yellow when a fault is detected on either of the panel's two conventional sounder circuits or if there is a sounder disablement anywhere on the system.
Delays Running	Lit yellow when one or more output delay has been programmed into the panel. Flashes yellow when one or more output delay is running.

Button controls

More Information	Displays additional information on any fire, pre-alarm or fault conditions that appear on the panel's display. Will also display additional context dependent information where appropriate.
(Scroll Up) ▲ 1 (Scroll Down) ▼ 3	Dependent on the status of the panel, these two buttons: • scroll vertically through any fire, pre-alarm or fault conditions that appear on the panel's display • scroll vertically through the panel's user menus • manipulate date, time and disablement settings, etc • serve as code input buttons to access levels 2 or 3.
Accept ▶ 2 Escape ◀ 4	Dependent on the status of the panel, these two buttons: • scroll horizontally through the panel's user menus • escape or accept options available in the panel's user menus • serve as code input buttons to access levels 2 or 3.
Menu	Provides access to the panel's menus
Silence Internal Sounder	Silences the panel's internal sounder
Control Panel Reset	Resets the panel when the sounders are silenced (access levels 2 & 3 only)
Silence / Resound Sounders	Silences or resounds the system's sounders (access levels 2 & 3 only)
Investigate	Starts the panel's investigate timer function (access levels 2 & 3 only)

Keyswitch control

Turning the keyswitch to the armed position **(I)** gives the user instant access to access level 2 (authorised user level).

COMMISSIONING AND PROGRAMMING

Overview

Commissioning is the setting to work of the equipment. The efficiency with which this is done depends upon:

- The accuracy of information received regarding the wiring and devices fitted.
- The freedom of the installation from faults and errors.
- The completeness of the information received from the client/specifier as regards the zoning, naming and functioning of the system.

The final quality of the installation ALWAYS depends upon the quality of these three factors.

Recommended commissioning procedure

Re-fit the panel's PCBs and all connection leads by reversing the removal procedure detailed on page 5. Ensure all PCB retaining screws are firmly fastened down and that the PSU earth strap is connected to the base earth post. If a network communication card is required, this should be fitted as shown on page 12.

Check the continuity of the loop, the resistance of the conventional sounder circuits (if applicable) and all other field wiring as appropriate to ensure they are free from faults. **DO NOT MEGGER!** Remove all electronic devices if 500V testing is demanded.

If okay, connect all field wiring to the main control PCB as detailed on pages 8 to 11.

Connect the Mains supply to the L, N and ⏚ terminals on the power supply PCB and the standby battery supply to its BAT1 terminals.

Upon powering up, the panel's LCD will display a number of start up messages detailing the protocol of the panel, etc.

Investigate any faults reported on the panel's display and take the necessary steps to correct them.

When all faults have been corrected, carry out a loop learn as detailed on page 21. Rectify any problems resulting from loop learn (e.g. double addresses, missing devices, incomplete loops etc. Note that a wide range of test and fault-finding functions are available in access level 3.

When all faults have been cleared, proceed to program the panel as appropriate.

When you are satisfied the panel has been programmed and is working correctly, secure the panel lid and instruct the client/customer in the operation of the system.

Complete and handover all necessary manuals and other documentation prior to leaving site.

System operation / terms of reference

Input devices such as detectors, manual call points and the input channels of I/O units are programmed to be members of a **Zone**.

Output devices such as loop powered sounders, sounder control units and the panel's conventional sounder circuits are programmed to be members of a **Group**.

The output channels of I/O units and the panel's relays are programmed to be members of a **Set**.

Zones are programmed via the panel's software to activate **Groups** and/or **Sets** as appropriate.

The method of activation of Groups can be continuous or pulsed, with or without a delay, as required.

Note that the panel's two auxiliary inputs can be programmed to function in a multitude of ways using the special cause and effects options available in the XFP programming software.

ACCESS LEVELS MENU TREE

Three access levels are available at the panel - access level 1 (general user), access level 2 (authorised user) and access level 3 (engineer). The diagram below shows the menu options available at each level, all of which can be navigated using the panel's scroll (▲ ▼), Accept (▶) and Escape (◀) buttons.
Note: The menu options shown in bold will only be available if relevant to the panel's status.

This manual focusses on the functions available at access level 3 only (access levels 1 and 2 are covered in the panel's separate user manual). Details of how to gain entry to access level 3 and an explanation of the various functions available can be found on the following pages.

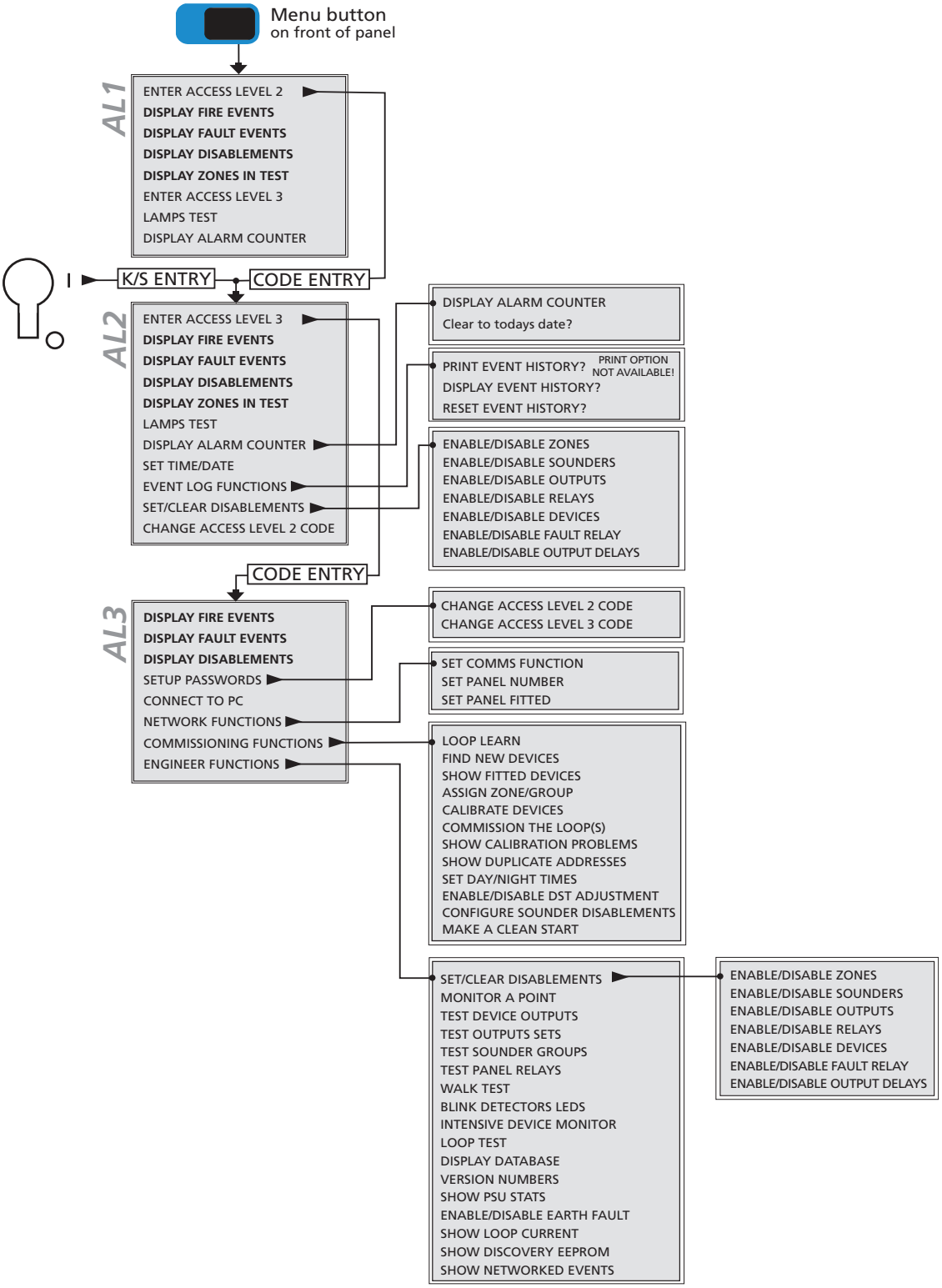

How to enter access level three

Access level 3 can be entered in one of two ways:

(1) By pressing the Menu button on the panel's front, scrolling down to ENTER ACCESS LEVEL 3 and pressing the Accept ▸ button. When you have done this, the following prompt will appear:

Enter Access Level 3 code:

Enter the four-digit access level 3 code using the ▲ (1) ▸ (2) ▼ (3) ◂ (4) buttons as appropriate. The default code is 4 4 4 4 (four presses of the ◂ button). If this does not work, the code may have been changed. As soon as the code has been entered correctly, you will be taken into access level 3 (see pages 19 to 33).

(2) By entering access level 2 as detailed in the panel's separate user manual, scrolling down to ENTER ACCESS LEVEL 3 and repeating the process described above.

In access level 3, the panel's Silence/Resound Sounders, Control Panel Reset and Investigate buttons become active and you can:

- Scroll through any fire, pre-alarm or fault conditions which are displayed on the panel's LCD
- View any disablements or zones that are in test (if applicable)
- Change the entry codes to access levels 2 and 3 from their factory default settings
- Connect the panel to a compatible PC for system programming
- Set the panel up to belong to a network of eight XFP main panels or allow it to have up to eight XFP repeaters connected to it
- Gain access to a wide range of commissioning functions including auto loop learn, device calibration and group/zone assignment
- Gain access to a wide range of engineering test and fault finding functions
- Ascertain software revision numbers, loop current and PSU statistics
- Enable/disable earth faults
- Set the time the panel enters and exits day (building occupied) and night (building unoccupied) mode
- Access all of the panel's access level 2 menu options as described in the panel's separate user manual.

This section of the engineering manual explains in detail the various functions available via the access level 3 menu options. (Note that information on how fire, pre-alarm and fault conditions are reported, and how the panel's control buttons operate, can be found in the separate user manual/log book.)

Fitting the panel's NVM 'memory unlock' link

To allow site-specific changes to be made to the panel's non-volatile memory, the NVM 'memory unlock' link must be fitted to the Main Control PCB, as shown right. It is recommended that you fit this link as a matter of course whenever you are in access level 3.

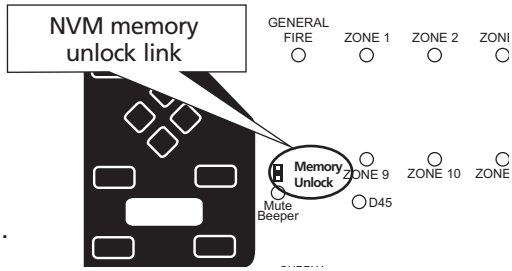

Remember to re-lock the memory (remove the link) when programming is complete to guard against data corruption.

If you do not re-lock the memory, a reminder message will appear when you leave access level 3.

A detailed description of the functions available at access level 3 can be found overleaf.

Display Fire Events

This function is only available if there are active fire conditions on the system. If available, press the Accept ▶ button and a window similar to the one below will appear:

```
Last Zone: 1:North Stairs          :Fire!
                                   1 Zone
```

Pressing the ▲ and ▼ buttons will scroll the display through all active fire conditions. More detailed information (if applicable) can be viewed by pressing the panel's More Information button. To return to the main access level 3 menu press the Escape ◀ button.

Display Fault Events

This function is only available if there are active faults on the system. If available, press the Accept ▶ button and a window similar to the one below will appear:

```
Zone 1: Ground Floor
There are faults on this zone
```

Pressing the ▲ and ▼ buttons will scroll the display through all active faults. More detailed information (if applicable) can be viewed by pressing the panel's More Information button. To return to the main access level 3 menu press the Escape ◀ button.

Display Disablements

This function is only available when there are active disablements on the system. If available, press the Accept ▶ button and a window similar to the one overleaf will appear:

```
1st Zone: 1: Shop floor
On: This Panel: Is Disabled
```

Pressing the ▲ and ▼ buttons will scroll the display through all active disablements. More detailed information (if applicable) can be viewed by pressing the panel's More Information button. To return to the main access level 3 menu press the Escape ◀ button.

Display Zones In Test

This function is only available if one or more zones are being tested. If available, press the Accept ▶ button and a window similar to the one below will appear:

```
Zone 1: North Stairs
Is On Test
```

Pressing the ▲ and ▼ buttons will scroll the display through all zones currently in test. More detailed information (if applicable) can be viewed by pressing the panel's More Information button. To return to the main access level 3 menu press the Escape ◀ button.

Setup Passwords

This function allows you to change the four digit access codes required to activate the panel's access level 2 or 3 menu options. When selected, press the Accept ▶ button and the following window will appear:

```
CHANGE ACCESS LEVEL 2 CODE?
Change Access Level 3 code
```

Use the ▲ and ▼ buttons to scroll to the desired option (the option in block capitals is the selected option) and press the Accept ▶ button. The following message will appear if the CHANGE ACCESS LEVEL 2 CODE? prompt is accepted.

```
Enter NEW Access Level 2 code:
```

Using the ▲ (1) ▶ (2) ▼ (3) ◀ (4) buttons, enter the new four digit access level 2 code. After the fourth digit has been entered, the panel will request you confirm the new code by re-entering it:

```
Enter NEW Access Level 2 code:****
Confirm New Access Level 2 code:
```

Enter the code again by pressing the ▲ (1) ▶ (2) ▼ (3) ◀ (4) buttons in same sequence. If the two codes match, the new code will be accepted and you will be taken back into Access Level 3. If you type an incorrect confirmation code you will be prompted to start the code entry sequence again. The same process can be used to change the access level 3 code. BE SURE TO KEEP A RECORD OF ANY CHANGED CODES FOR FUTURE USE.

Connect to PC

This function allows you to activate the panel's PC connection for system programming purposes. ALL of the panel's cause and effect programming, device and zone naming, zone dependency functions, etc., must be carried out using our separately PC programming software tools (XFP507). When the CONNECT TO PC? prompt appears, press the Accept ▶ button. If all connections are correct, the following message will appear:

```
PC connected...
Press ESC to disconnect from PC
```

If there is a problem with the panel to PC connection, this will be flagged at the PC when you try to upload or download any site specific data.

Network functions

Selecting this menu option takes you to the network functions submenu where you can configure the panel to be part of a network of up to eight XFP master panels or allow it to have up to eight XFP repeaters connected to it. This option is only available if you have a network communication card fitted at the panel (see pages 12 & 13 for a detailed overview of master panel networking and repeater panel connection). The network functions submenu has three options - SET COMMS FUNCTION, SET PANEL NUMBER and SET PANEL FITTED. Other options, such as what events and what level of control is allowed between networked panels is implemented using the panel's PC programming software tools.

SET COMMS FUNCTION

This function allows you to set the panel's RS485 comms to operate in Network or Repeater mode. When selected, press the Accept ▶ button and a message similar to the one below will appear:

```
COMMS IS SET FOR: REPEATER
```

Use the ▲ and ▼ buttons to scroll between Repeater and Network and press the Accept ▶ button as appropriate. The panel's flash database will update and you will be returned to the Network Functions submenu.

SET PANEL NUMBER

If networking XFP main panels, this function allows you to give the panel a unique ID number (1-8) so it can be recognised by other panels on the network. Note that Repeaters do not need to be assigned an ID number. When selected, press the Accept ▶ button and a message similar to the one below will appear:

```
SET PANEL NUMBER:1
```

Use the ▲ and ▼ buttons to scroll to the desired number and press the Accept ▶ button to select it. The panel's flash database will update and you will be returned to the Network Functions submenu.

SET PANEL FITTED

This function allows you to turn off the fault monitoring of other networked XFP main panels. It is typically used if maintenance work is to be carried out at a networked panel to temporarily prevent integrity faults being flagged. When selected, press the Accept ▶ button and a message similar to the one below will appear:

```
NETWORK PANEL:1
```

Use the ▲ and ▼ buttons to scroll to the desired networked panel and press the Accept ▶ button to accept it. The panel's flash database will update and you will be returned to the Network Functions submenu. Remember to reverse the function when maintenance work is complete.

Commissioning functions

Selecting this menu option takes you to the commissioning functions submenu where you can carry out a loop learn; find new devices; view fitted devices; assign detectors/call points to zones and sounders/beacons to groups; manually calibrate devices; and/or return the panel to its default factory settings. All of these functions are described in detail below. Note that the vast majority of system commissioning - cause and effect programming, device and zone naming, etc. - must be carried out using our separately available PC programming software tools (Part No. XFP507).

LOOP LEARN

This function activates the panel's automatic loop learn facility. During a loop learn, the panel interrogates every address location on the loop to see if an addressable unit is present and, if so, finds out what type of device it is. When the LOOP LEARN? prompt appears, press the Accept ▶ button and you will be asked to confirm that you wish to continue:

```
Continue with Loop Learn?
```

Press the Accept ▶ button again to continue and you will be asked to select which loop(s) you want the panel to learn (1, 2 or ALL, as applicable).

```
Learn Loop:All
```

Use the ▲ and ▼ buttons to scroll to the desired loop(s) and press the Accept ▶ button. As the panel may already have loop device data stored in its memory from a previous loop learn or PC upload, you will be asked if you want to erase this information before the loop learn begins.

```
Erase ALL loop device data first?
```

You now have two options, as detailed below:

Option 1
If the panel has not previously been programmed or if you want to program an existing system as if it were a new system, press the Accept ▶ button. The following message will appear:

```
Are you sure you want to erase
the Database?
```

Press the Accept ▶ button again and the panel will erase its database, update its flash memory and start to learn the loop(s) as appropriate.

Note that by default the loop learn will assign all detectors/manual call points to zone 1 and all sounders/ beacons to group 1. This is to ensure that all of the system's sounders will activate in the event of a fire condition anywhere in the building, i.e. one out, all out. These default settings can be modified as appropriate using the panel's PC programming software tools at a later date. Note that no default sets are assigned to the outputs of I/O units - these must be assigned using the panel's PC programming software tools.

Option 2
If you DO NOT wish to erase the loop device data, press the Escape ◀ button and the panel will immediately start to learn the loop without overwriting data such as zone and group allocation, detector sensitivities, device names, etc., which will remain as it was before the Loop Learn. The only data that will be overwritten is device type and whether or not it is fitted. See note above about default loop learn settings.

Depending on the size of the installation, the loop learn process can take several minutes. When the auto-learn process is complete, a brief summary window will appear, similar to the one below:

```
0 changed; 0 removed; 112 total devices
Auto learn completed
```

Press the Escape ◀ button to return to the Commissioning Functions submenu.

FIND NEW DEVICES

This function allows you to check if any new devices have been connected to the panel since the last loop learn. It works in a similar way to the loop learn function except whilst learning the loop, the panel asks if you want to accept any of the new devices it has found and allows you to assign them to a detector zone or sounder group as appropriate. To start the search process, when the FIND NEW DEVICES? prompt appears press the Accept ▶ button. The following window will appear:

```
Continue to find new devices?
```

Press the Accept ▶ button again to confirm you wish to continue and you will be asked to select which loop(s) you want the panel to search for new devices on (1, 2 or ALL, as applicable).

```
On loop:1
```

Use the ▲ and ▼ buttons to scroll to the desired loop(s) and press the Accept ▶ button. The search will now begin. When a new device is found, the panel will tell you its type, its address (Dev) and the loop it is fitted on, for example:

```
Loop:2 Dev :48 :Optical det 0x88
Accept device?
```

To accept the new device press the Accept ▶ button. Alternatively, press the Escape ◀ button to reject it. If the Escape ◀ button is pressed, the panel will continue searching until the next new device is found. If the Accept ▶ button is pressed, you will be given the opportunity to assign the device to a detector zone or a sounder group as appropriate. For example:

```
Shop floor:  No name allocated
Belongs to Zone:- 1
```

Use the ▲ and ▼ buttons to scroll to the desired zone or group and press the Accept ▶ button. The device search will now continue until the next new device is found. (Note that I/O units, etc. can only be assigned to output sets via the panel's programming tools. Therefore, when accepted, the panel will continue its search for new devices straightaway. When the new device search is complete, a brief summary window will appear, similar to the one below:

```
0 changed; 0 removed; 112 total devices
Auto learn completed
```

Press the Escape ◀ button to return to the Commissioning Functions submenu.

SHOW FITTED DEVICES

This function will list all of the addressable devices stored in the panel's memory. It DOES NOT give a list of what is on the loop at the exact time the function is selected, i.e unlearnt devices will not show but faulty / missing devices will. When the SHOW FITTED DEVICES prompt appears, press the Accept ▶ button and you will be asked to select which loop's devices you want to view:

```
On loop:1
```

Use the ▲ and ▼ buttons to scroll to the desired loop(s) and press the Accept ▶ button. A window similar to the one below will appear.

```
L:1D: 1   SMCCOOIC-I  10
L:1D: 11  -C-TT--MMC  20
```

Devices are displayed in groups of 10. In the example above, the top line shows the type of devices fitted at addresses 1 to 10 on loop 1 and the second line shows the type of devices fitted at addresses 11 to 20. The letters displayed will be dependent on the type of device at that address location.

C = call point	I = ionisation detector	M = module
O = optical detector	S = sounder	Z = zone monitor
H = heat detector	D = multisensor	? = unknown

To view the remaining devices on the loop, use the ▲ and ▼ buttons as appropriate. Press the Escape ◀ button to return to the Commissioning Functions submenu.

ASSIGN ZONE/GROUP

This function allows you to assign devices to be members of detector zones or sounder groups as appropriate. This would normally be done using the panel's PC programming software tools but is provided at the panel in case you need to add a device at short notice, typically when a PC is not available. It therefore allows you to get a new device working in a basic manner whilst it is waiting to be properly configured at a later date. When selected, you will be prompted to enter the loop on which the device you want to assign is located followed by the device's address (device) number:

```
Loop:1 Device:-1
```

Use the ▲, ▼ and Accept ▶ buttons to select the desired loop and address (device). You will then be presented with the zone/group assignment window, for example:

```
Shop floor:  No name allocated
Belongs to Zone:- 1
```

Use the ▲ & ▼ buttons to scroll to the desired zone or group and press the Accept ▶ button. The assignment will be made and you will be prompted to select another loop/device to assign using the same procedure. Alternatively, to return to the Commissioning Functions submenu press the Escape ◀ button. Important, although I/O units, etc., can be assigned to be members of zones using this menu, this will only apply to their input functions. The panel's PC programming software tools must be used to assign them to output sets.

CALIBRATE DEVICES

Daily calibration of the system's smoke and heat detectors (to take into account environmental changes, drift compensation factors, etc.) takes place automatically at 0400 hours, or at an alternative time as programmed by the engineer. The CALIBRATE DEVICES function allows you to carry out an additional manual calibration of the system's devices at any time. When selected, you will be asked if you wish to proceed:

```
Continue to Calibrate Devices?
```

Press the Accept ▶ button and calibration will start. Depending on the size of the system, this may take some time. When calibration is complete, the system will return to the Commissioning Functions submenu.

COMMISSION THE LOOP(S)

This function refreshes the characteristics (calibration levels, contamination values, etc) and checks the type codes of all devices connected to the loop(s). When selected, you will be asked if you wish to proceed:

```
This may take several minutes
OK to proceed?
```

Press the Accept ▶ button and the commissioning function will start. When completed, the system will return to the Commissioning Functions submenu.

SHOW CALIBRATION PROBLEMS

This function allows you to view any detector(s) with calibration issues. In addition to listing detectors that have definitely failed to calibrate correctly and will no longer function reliably, it also lists those that are in the process of being checked and MAY fail to operate correctly.

When the SHOW CALIBRATION PROBLEMS prompt is accepted, details of the first detector with a calibration problem will appear. For example:

```
Loop: 1 Device: 23 :Calibration issue
Turn ON output channels 1&3
```

If there are multiple addresses with calibration issues, press the ▲ button to scroll to the next affected address.

Press the Accept ▶ button and output channels 1 and 3 of the detector being viewed will be asserted. Once activated, you will be given the option to switch off output channels 1 and 3 by pressing the Accept ▶ button again. Press the Escape ◀ button as appropriate to return to the previous menus or to select another device with calibration issues.

SHOW DUPLICATE ADDRESSES

This function helps you to locate devices with duplicate addresses by asserting their output channels 1&3. In the case of detectors and manual call points, activating these channels will turn their LEDs on. **Caution:** Note that channels 1 & 3 on an I/O unit may be programmed to trigger say, a water extinguishant system, so this function must be used with care. Activating channels 1 and 3 on a sounder/beacon will have no effect.

When the SHOW DUPLICATE DEVICES prompt is accepted, details of the first double address will appear. For example:

```
Loop: 1 Device: 23 :Duplicate Address
```

If there are multiple duplicate addresses, press the ▲ button to scroll to the next affected address. Press the More Information button at any time and a window similar to the one below will appear:

```
Loop: 1 Device: 23 :Duplicate Address
Turn ON output channels 1&3
```

If you are happy to proceed, press the Accept ▶ button and output channels 1 and 3 of all devices with the duplicate address being viewed will be asserted.

Once activated, you will be given the option to switch off output channels 1 and 3 by pressing the Accept ▶ button again. Press the Escape ◀ button as appropriate to return to the previous menus or to select another duplicate address to check.

SET DAY/NIGHT TIMES

This function allows the user to alter the time the panel enters day (building occupied) and night (building unoccupied) mode. WE RECOMMEND YOU DO NOT USE THIS FUNCTION UNLESS YOU ARE INTIMATELY FAMILIAR WITH THE OPERATION OF THE FIRE ALARM SYSTEM.

Changes that may take place when the panel is in day/night mode include detector sensitivities (how quick a detector reacts in the event of a fire), cause and effects (what happens in the event of a fire) and sounder volumes (if available). These changes can only be made by an authorised engineer using the panel's sophisticated programming tools at access level 3. If in doubt, refer to page 20 where any day/night changes will be recorded, provided it has been completed by the system engineer.

When the SET/DAY NIGHT TIMES prompt appears, press the Accept ▶ button and the following window (or similar) will appear:

```
Day (Occupied) mode begins:- 06:00
```

Use the ▲ and ▼ buttons to set the time in hours that you want the panel to enter day mode (the panel has a 24 hour clock so hours 0 to 23 are available).

When the correct hour is displayed, press the Accept ▶ button to move to the minutes field.

Use the ▲ and ▼ buttons to set the time in minutes you want the panel to enter day mode.

When the desired time is displayed, press the Accept ▶ button to access the night mode entry field.

A window similar to the one below will appear:

```
Day (Occupied) mode begins:-
Night (Un-Occupied) mode begins:- 18:00
```

Use the scroll ▲ ▼ and Accept ▶ buttons to set the time in hours and minutes that you want the panel to enter night mode. When the desired time is displayed, press the Accept ▶ button again and you will be returned to the commissioning functions submenu.

ENABLE/DISABLE DST (DAYLIGHT SAVING TIME) ADJUSTMENT

This function (when enabled) allows you to programme the panel's time so it automatically goes forward one hour on the last Sunday in March and goes back one hour on the first Sunday in October:

```
Auto DST Time Adjustment is:
Enabled
```

Press the ▲ and ▼ buttons to scroll between enabled and disabled and Accept ▶ to select the desired option.

CONFIGURE SOUNDER DISABLEMENTS

This function configures the Sounder Groups (1 to 16) to be 'Globally' or 'Individually' disabled / enabled. When accepted, two windows are available:

```
Sounder Groups can be Disabled/Enabled
'Globally'
```

```
Sounder Groups can be Disabled/Enabled
'Individually'
```

Press the ▲ and ▼ buttons to scroll between 'Globally' and 'Individually' and Accept ▶ to select the desired option.

MAKE A CLEAN START

This function allows you to clear the panel's memory back to its factory default settings. When selected you will be asked to input the five digit clean start confirmation code:

```
Enter confirmation code:
```

The button sequence for this is ▲ (1), ▶ (2), ▼ (3), ◀ (4), Silence Internal Sounder button.

Engineer functions

Selecting this menu option takes you to the engineer functions submenu where you can set or clear disablements, access the panel's comprehensive test functions and display important system status information. All of the panel's engineering submenu functions are described in detail below.

SET/CLEAR DISABLEMENTS

Selecting this menu option takes you to the disablements sub-menu which allows you to enable or disable zones, sounders, outputs, relays, individual devices and/or the panel's fault relay. Any disablement(s) will be indicated at all access levels via the DISPLAY DISABLEMENTS menu and the General Disablement LED on the front of the panel. We strongly recommend all disablements are regularly reviewed and immediately enabled when no longer necessary as they can have a major effect on how the system works. The following options are available:

ENABLE/DISABLE ZONES

This function allows you to disable zones from reporting faults, fires, pre-alarms, etc., and is normally used to temporarily disable a zone of detectors/call points in areas such as loading bays that are prone to nuisance triggering from vehicle fumes. When selected, press the Accept ▶ button and a window similar to below will appear:

Select the zone to be disabled/enabled using the ▲ and ▼ buttons. Press the Accept ▶ button and the zone's status (Enabled or Disabled) will flash. Next, use the ▲ and ▼ buttons to toggle between enabled and disabled and press the Accept ▶ button to select the desired option. The window will now move to the next available zone allowing further enablements or disablements to be made. Alternatively, to return to the previous menu press the Escape ◀ button.

```
Zone: 1: Shop Floor
Enabled
```

Please note: if all the input devices on a zone have been individually disabled using the ENABLE/DISABLE DEVICES function described on page 26, the zone they belong to will also be disabled. If you try to re-enable a zone which has no enabled devices on it, a prompt appears saying this cannot be done. Instead you must first enable at least one device on the zone using the ENABLE/DISABLE DEVICES function before re-enabling the zone itself.

ENABLE/DISABLE SOUNDERS

This function allows you to disable one or more sounder groups from sounding in a fire condition. When selected, press the Accept ▶ button and a window similar to the one below will appear:

```
Sounder Group: All
```

Select the sounder group (1 to 16 or ALL) to be disabled/enabled using the ▲ and ▼ buttons. When the desired sounder group has been selected, press the Accept ▶ button once and the sounder group's status (Enabled or Disabled) will flash. Next, use the ▲ and ▼ buttons to toggle between enabled and disabled and press the Accept ▶ button to select the desired option. The window will now move to the next sounder group allowing further enablements or disablements to be made. Alternatively, to return to the previous menu press the Escape ◀ button.

ENABLE/DISABLE OUTPUTS

This function allows you to disable one or more output sets from sounding in a fire condition. It is typically used to disable, for example, auto-diallers from activating during routine maintenance. When selected, press the Accept ▶ button and a window similar to the one below will appear:

```
Output Set: All
```

Select the output set (1 to 16 or ALL) to be disabled/enabled using the ▲ and ▼ buttons.

When the desired output set has been selected, press the Accept ▶ button and the output set's status (Enabled or Disabled) will flash. Next, use the ▲ and ▼ buttons to toggle between enabled and disabled and press the Accept ▶ button to select the desired option. The window will now move to the next output set allowing further enablements or disablements to be made. Alternatively, to return to the previous menu press the Escape ◀ button.

ENABLE/DISABLE RELAYS

This function allows the disablement of one or more of the panel's 3 auxiliary relays from activating as programmed. When selected, press the Accept ▶ button and a window similar to the one below will appear:

```
Panel Relay:- 1
```

Select the relay (1, 2 or 3) to be disabled/enabled using the ▲ and ▼ buttons. When the desired relay has been selected, press the Accept ▶ button and the relay's status (Enabled or Disabled) will flash. Next, use the ▲ and ▼ buttons to toggle between enabled and disabled and press the Accept ▶ button to select the desired option. The window will now move to the next relay allowing further enablements or disablements to be made. Alternatively, to return to the previous menu press the Escape ◀ button.

ENABLE/DISABLE DEVICES

This function allows loop devices to be disabled from reporting faults, fires, pre-alarms, etc., and is normally used to temporarily disable detectors/call points that are nuisance tripping. When selected, press the Accept ▶ button and a window similar to the one below will appear:

```
Select Zones:- 1: Shop Floor
```

Use the ▲ and ▼ buttons to select the zone where the device you wish to disable/enable is located. When selected, press the Accept ▶ button and a list of all devices that can be disabled or enabled in that zone will appear, for example:

```
Shop Floor:- 1: Gent
Loop 1, Device 3: Enabled
```

Use the ▲ and ▼ buttons to scroll through the available devices. When the desired device appears, press the Accept ▶ button and the device's status (Enabled or Disabled) will flash. Next, use the ▲ and ▼ buttons to toggle between enabled and disabled and press the Accept ▶ button to select the desired option. The window will now move to the next device allowing further enablements or disablements to be made. Alternatively, to return to the previous menu press the Escape ◀ button.

Please note: if all the input devices on a zone are individually disabled, the zone they belong to will also be disabled. If you try to re-enable a zone which has no enabled devices on it using the ENABLE/DISABLE ZONES function described on page 25, a prompt appears saying this cannot be done. Instead you must first enable at least one device on the zone before re-enabling the zone itself.

ENABLE/DISABLE FAULT RELAY

This function can be used to suppress the panel's fault relay from activating in a fault condition. When selected, press the Accept ▶ button and the following window will appear:

```
Fault relay is:-
Enabled
```

Use the ▲ and ▼ buttons to toggle between enabled and disabled and press the Accept ▶ button to select the desired option. Alternatively, to return to the previous menu press the Escape ◀ button.

ENABLE/DISABLE OUTPUT DELAYS

This function can be used to globally disable or enable any delays to outputs that have been programmed into the panel. When selected, press the Accept ▶ button and the following window will appear:

```
Delays to Outputs are:-
Enabled
```

Use the ▲ and ▼ buttons to toggle between enabled and disabled and press the Accept ▶ button to select the desired option. Alternatively, to return to the previous menu press the Escape ◀ button.

MONITOR A POINT

This function allows you to view the current analogue status of any point (any addressable device on the system). When selected, you will be prompted to enter the loop on which the device you want to monitor is located and the device's address :

```
Loop:1 Device:-1
```

Use the ▲, ▼ and Accept ▶ buttons to select the desired loop and address. The panel will temporarily disable the point in question and return back its analogue values, for example:

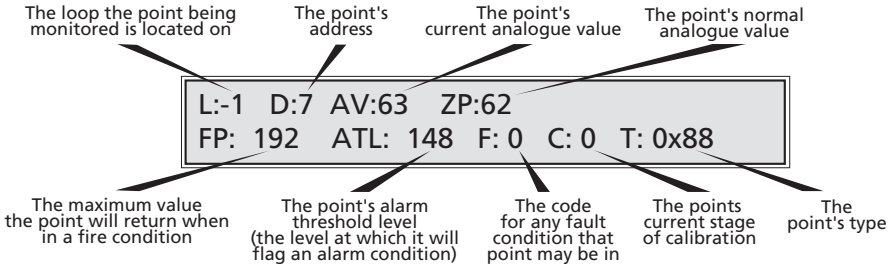

To return to the Engineer Functions submenu press the Escape ◀ button.

TEST DEVICE OUTPUTS

This function allows you to assert the output(s) of any addressable device to check it is working correctly. It can be used, for example, to assert a detector's internal or remote LED (if connected) or to check that an I/O unit is functioning correctly. Addressable devices typically have three output channels (1, 2 and 3), the functions of which depend upon its type - please refer to the device manufacturers technical data for further information. When selected, you will be prompted to enter the loop on which the device you want to test is located, the device's address and the relevant output bit code (0 to 7, as explained in the table below):

```
Loop:-1  Device 1
Output bits: 0
```

Use the ▲, ▼ and Accept ▶ buttons to select the desired loop, address (device) and output bit code.

OUTPUT BIT CODES AND WHICH OUTPUT CHANNELS THEY ASSERT

CODE	OUTPUT CHANNELS ASSERTED
0	No output channel asserted
1	Output channel 1 asserted
2	Output channel 2 asserted
3	Output channels 1 and 2 asserted
4	Output channel 3 asserted
5	Output channels 3 and 1 asserted
6	Output channels 2 and 3 asserted
7	All output channels asserted

When you have accepted the required output bit option, the panel will confirm your selection and the device's output channels will be asserted as programmed. If desired, you can now select alternative sequences using the ▲ and ▼ buttons (note that as the device is now 'live' you will not have to press the Accept ▶ button to make these changes). When testing is complete, press the Escape ◀ button to return to the Engineer Functions submenu. The device will no longer be 'live' and its output bits will return to their normal settings.

TEST OUTPUT SETS

This function allows you to test one or all of the system's output sets (1 to 16) by altering its/their state from Normal to Triggered. When the TEST OUTPUT SETS? prompt appears, press the Accept ▶ button and the output set selection window will appear:

```
Output set:-1
```

Use the ▲ and ▼ buttons to select the output set you would like to test (all or 1 to 16). Press the Accept ▶ button and the following window will appear:

```
Output set:-1 is Normal
Change the state using the Accept button
```

Press the Accept ▶ button and the output set you have selected will activate. To change the state back to normal press the Accept ▶ button again. Should you wish to test additional output sets, use the ▲ and ▼ buttons to change the output set's number accordingly. To return to the main Engineer Functions submenu, press the Escape ◀ button.

TEST SOUNDER GROUPS

This function allows you to test one or all of the system's sounder groups (1 to 16) by altering its/their state between Silenced, Intermittent and Continuous. When the TEST SOUNDER GROUP? prompt appears, press the Accept ▶ button and the sounder group selection window will appear:

```
Sounder group:-1
```

Use the ▲ and ▼ buttons to select the sounder group you would like to test (all or 1 to 16). Press the Accept ▶ button and the following window will appear:

```
Output:-1 is Silenced
Change the state using the Accept button
```

Press the Accept ▶ button to change the state of the selected sounder group between Silenced, Intermittent and Continuous. Should you wish to test additional sounder groups, use the ▲ and ▼ keys to change the sounder group's number accordingly. To return to the main Engineer Functions submenu, press the Escape ◀ button.

TEST PANEL RELAYS

This function allows you to test the panel's three volt-free relays. When the TEST PANEL RELAYS prompt appears, press the Accept ▶ button and the panel relay selection window will appear:

```
Panel relay:-1
```

Use the ▲ and ▼ buttons to select the output set you would like to test (all or 1 to 16). Press the Accept ▶ button and the following window will appear.

```
Panel relay:-1 is Normal
Change the state using the Accept button
```

Press the Accept ▶ button and the panel relay you have selected will trigger. To change the state back again press the Accept ▶ button again. Should you wish to test additional panel relays, use the ▲ and ▼ buttons to change the panel relay's number accordingly. To return to the main Engineer Functions submenu, press the Escape ◀ button.

WALK TEST

This function allows you to put one or more of the system's detection zones into walk test mode. When a zone is in walk test mode, any detector/manual call point triggered on that zone will turn on all of the sounders that are mapped to that zone for a brief period (note that output sets will not operate). When the WALK TEST prompt appears, press the Accept ▶ button and the zone selection window will appear:

```
Zone:-1
```

Use the ▲ and ▼ buttons to select the zone you wish to put into walk test mode. Press the Accept ▶ button and the following window will appear:

```
Zone:-1
Normal operation
```

Use the ▲ and ▼ buttons to change the zone's state from Normal Operation to Walk Test Mode and press the Accept ▶ button. You will now be returned to the Engineering Functions submenu and you can proceed to test the zone as appropriate (note that you must be in access level 1 if you wish to view the device(s) being tested).

Should you wish to put additional zones into test at the same time, you can do so by repeating the above process. To take zones out of test, reverse the procedure. Any zones in test will be indicated at all access levels via the DISPLAY ZONES IN TEST menu and the 'test' LED on the front of the panel.

BLINK DETECTOR LEDS

This function allows you to momentarily assert the LED outputs of loop devices such as detectors and manual call points in one continual sweep. This is a particularly useful function for helping to locate any open or short circuit faults on the loop wiring.

LEDs are asserted on all learnt loop devices on a step-by-step basis (each step takes approximately one second. Therefore, on a system with, say, 80 loop devices, each device will blink once every 80 seconds). You can select the test to be carried out from either end of the loop or from both ends at the same time. An example illustration of how this test may be carried out is shown below:

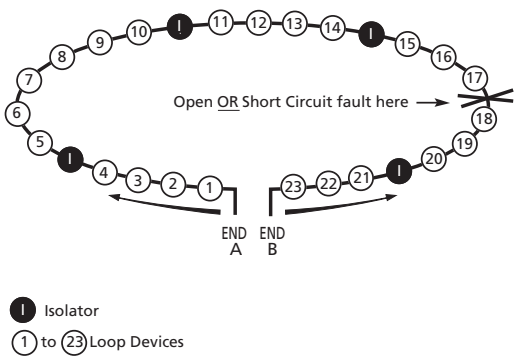

For a fault between points 17 and 18 on the example loop (left):

OPEN CIRCUIT FAULT:
If Direction A (End A) is selected, all devices 1-17 will periodically illuminate with devices 18-23 not illuminated.
If Direction B (End B) is selected, all devices 18-23 will periodically illuminate with devices 1-17 not illuminated.
This would therefore identify an open circuit fault between devices 17 & 18.

SHORT CIRCUIT FAULT:
If Direction A (End A) is selected, then all devices 1-14 will periodically illuminate. The short circuit isolator between devices 14 & 15 will have been activated and all other devices 15-23 will not be lit.
If Direction B (End B) is selected, then devices 21-23 will periodically illuminate. The short circuit isolator between devices 20 and 21 will have been activated and all other devices 1-20 will not be lit.
This would therefore identify a short circuit fault somewhere between the two isolators containing devices 15-20.

When the BLINK DETECTOR LEDs? prompt appears, the following window will appear:

```
Which loop:-1
```

Select the loop you wish to carry out the test on using the ▲ and ▼ buttons and press the Accept ▶ button. You will then be prompted to select from which end of the loop you wish to run the test:

```
Which loop:-1    End A
```

Use the ▲ and ▼ buttons to select End A, End B or Both Ends as appropriate and press the Accept ▶ button. The LEDs of all detectors on the loop will now start blinking accordingly. Note that addresses do not have to be in sequential order for this facility to work. To end the test press the Escape ◀ button at any time.

INTENSIVE DEVICE MONITOR

This function allows you to monitor a specific addressable point to see how it responds to intensive, repeated polls from the panel. In order to do this, the panel suspends all other system activity when this test is taking place - fires, etc, will not be flagged so please use this function with care. By reporting back how many good and bad polls are made between the panel and the monitored device, this function can help pinpoint loop wiring/communication faults and/or faulty devices.

When selected, you will be prompted to enter the loop on which the device you want to monitor is located, the device's address and its output bit sequence:

```
Loop:-1  Device 1
Output bits: 0
```

Use the ▲, ▼ and Accept ▶ buttons to select the desired loop, address (device) and output bit sequence.

The output bit option allows you to monitor a device whilst it is in a particular state, for example, if an I/O unit is reporting back faults only when it has triggered, say, a rollershutter door (e.g when its output channel 1 is asserted), you can set the device up so it is in this state whilst being monitored. See the table below for the output bit options available:

OUTPUT BIT CODES AND WHICH OUTPUT CHANNELS THEY ASSERT

CODE	OUTPUT CHANNELS ASSERTED
0	No output channel asserted
1	Output channel 1 asserted
2	Output channel 2 asserted
3	Output channels 1 and 2 asserted
4	Output channel 3 asserted
5	Output channels 3 and 1 asserted
6	Output channels 2 and 3 asserted
7	All output channels asserted

Caution: Note that certain channels on an I/O unit may be programmed to trigger say, a water extinguishant system, so this function must be used with care. When you have accepted the device's output bits sequence by pressing the Accept ▶ button, the test will begin and the panel will display the device's current analogue values, for example:

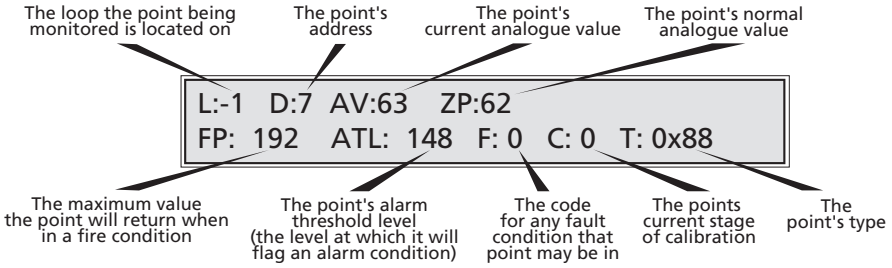

As the device is intensively polled, some of its analogue values may change, helping to assist you in the fault finding process. To view a running total of the number of good and bad polls between the panel and the device at any time, press the More Information button and a window similar to the one below will appear:

```
Good polls:  592, Bad polls: 3
```

To return to the analogue value window press the More Information button again. To exit the INTENSIVE DEVICE MONITOR function press the Escape ◀ button.

LOOP TEST

This function helps pinpoint loop wiring/communication faults by continually polling all loop addresses for a specified number of times and reporting back how many good and bad polls there have been on an address by address basis. In order to do this, the panel suspends all other system activity when this test is taking place - fires, etc, will not be flagged so please use this function with care. When selected, you will be prompted to enter the loop you wish to monitor and how many times you want the panel to poll each device (1 to 255).

```
Loop:-1
```

```
Number of polls for each device:25
```

Use the ▲, ▼ and Accept ▶ keys to select the desired loop followed by the number of polls required. The test will begin and a test status window will appear, showing the address currently being polled together with a running total of the number of good and bad polls. Polling takes place on an address by address basis in numerical order and will take several minutes.

```
Loop:1  Device 1: Results
Good polls:25 Bad Polls:0
```

When the test is complete, the results will appear in a new window, similar to the one below.

```
Loop:1  Device 1:Results
Good Polls:128  Bad Polls:3
```

Pressing the Escape ◀ button will abort the test at the address currently being polled.

A number of bad polls in a particular section of the system indicates a problem area for investigation, e.g. voltage drop, bad connection, etc.

To assert output channels 1 and 3 of the device being viewed, press the More Information button. You will be presented with a window similar to the one below:

```
Loop:1  Device: 1
Turn ON output channels 1&3
```

In the case of detectors and manual call points, activating channels 1 and 3 will turn their LEDs on.

Caution: note that channels 1 and 3 on an I/O unit may be programmed to trigger say, a water extinguishant system, so this function must be used with care.

Activating channels 1 and 3 on a sounder/beacon will have no effect.

If you are happy to proceed, press the Accept ▶ button to assert the output channels of the selected device. Once activated, you will be given the option to switch off output channels 1 and 3 by pressing the Accept ▶ button again.

Press the Escape ◀ button as appropriate to return to the previous menus.

DISPLAY DATABASE

This function allows you to view the panel's database of loop devices. Available on a loop by loop basis, the information displayed includes the device's type, address and description (zone and device text).

When the DISPLAY DATABASE? prompt is accepted, you will be prompted to enter the loop you wish to view the database of:

```
Loop:-1
```

Use the ▲ and ▼ buttons to select the desired loop and press the ▶ Accept button. You will then be prompted to enter the address of a particular device.

```
Loop:-1      Device:22
```

Use the ▲ and ▼ buttons to select the desired address number and press the Accept ▶ button. The information that is stored on the database that relates to that address will now appear, for example:

```
Loop:-1      Device:22/0: Optical det 0x88
Shop Floor           Gents Toilet
```

You can now use the ▲ and ▼ buttons to scroll through the rest of the database for the selected loop as required. To exit the database, press the Escape ◀ button at any time.

VERSION NUMBERS

This function allows you to view the current version number of the panel's firmware and to ascertain when the site's data was last changed. When accepted, the following two windows (with details specific to the panel) will appear in quick succession.

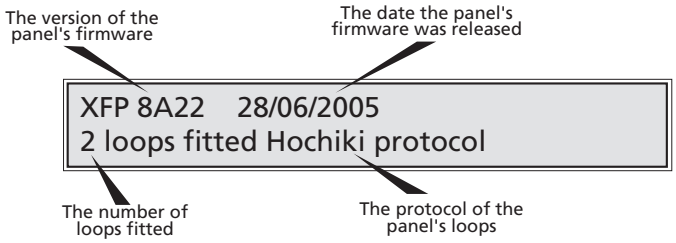

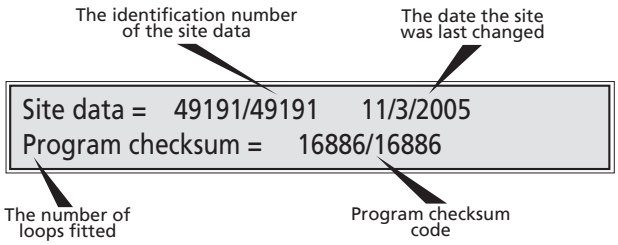

Matching site data codes, i.e. 49191/49191 and program checksum codes, i.e. 16886/16886, show that the panel is functioning correctly. Mis-matched numbers, i.e. 49191/40286, indicate that the panel's memory may be corrupt. After five seconds the panel will return to the Engineering Functions submenu.

SHOW PSU STATS

This function allows you to view important information regarding the state of the panel's PSU and its standby battery supply. When accepted, two windows (similar to the following) will appear in quick succession:

```
Batt = 24651mV  Earth fault = OK
Mains = OK  Batt = OK  Charge = OK
```

```
Batt R = OK
Mains = OK  Batt = OK  Charge = OK
```

To return to the Engineering Functions submenu, press the Escape ◀ button.

ENABLE/DISABLE EARTH FAULT

This function allows the panel's earth fault monitoring circuitry to be temporarily disabled. When accepted the following window will appear:

```
Earth fault monitoring is:-
Enabled
```

Use the ▲ and ▼ buttons to toggle between enabled and disabled and press Accept ▶ button to select the desired option. The panel's flash database will update and you will be returned to the Engineering Functions submenu.

SHOW LOOP CURRENT

This function allows you to view the level of current being drawn by the addressable loop(s) at any given time to help verify the design of a system. When accepted, a window similar to the following will appear:

```
Loop 1 current = 3mA
Loop 2 current = 7mA
```

The actual current drawn will depend upon the size of the loop and the number of items connected.

Press the Escape ◀ button to return to the Engineering Functions submenu.

SHOW DISCOVERY EEPROM

This function allows the panel to interrogate and view information held by Apollo Discovery devices. When accepted, enter the loop and address of the Apollo Discovery device, example shown below:

```
Loop : '1'
```

▶

```
Loop : 1   Device : 'nn'
```

When accepted, a list of 16 'Extended Command Field Data' is shown on the display:

LOCATION NUMBERS

0	1	2	3	4	5	6	7
XX	XX	XX	XX	XX	XX	XX	XX
XX	XX	XX	XX	XX	XX	XX	XX
8	9	10	11	12	13	14	15

For an explanation of the numbers displayed, refer to the relevant Apollo device documentation.

SHOW NETWORKED EVENTS

This function allows the status of a network event to be displayed, which is useful for fault diagnosis purposes. When accepted, a window similar to the following will appear:

```
F  F  F  F  F  T  F  F  F  F  F  T  T  F  F  F
```

T = Event True; F = Event False

MAINTENANCE

Periodic system maintenance should be carried out on the system as prescribed in the local design, maintenance and installation regulations.

The Fire Alarm panel's standby batteries should be checked for integrity of the connections, deposits indicating venting, and a periodic load test with the Mains supply disabled to ensure adequate battery capacity. Both batteries should be renewed if there is any doubt about their integrity.

The memory log should be checked for any faults that have automatically cleared, and these dealt with accordingly.

STANDBY BATTERY CALCULATION GUIDE

The standby time of the fire alarm panel after the Mains has failed depends on the quiescent loading of the panel, the alarm load of the panel, and the capacity of the batteries.

To determine the capacity of batteries required for any given stand-by period, the following formula should be used:

Standby Time in Ah = 1.25 x [(TxA) + H x (P+Z)]

The multiplier 1.25 is present to account for lost capacity over the life of the batteries.

H = Number of hours standby required

P = The quiescent current of the panel = 0.042A

This value is with the Mains failed, beeper silenced and the Supply Present and General Fault indicators lit. If there are other quiescent drains on the Panel then these must be added in.

Z = The total quiescent current of all zone devices

As a guideline, the average quiescent current addressable devices is typically 0.00025A (250µA). To obtain accurate figures consult the device manufacturers' own specifications.

A = The total alarm current of the panel sounders (plus any other devices connected to other alarm outputs).

T = The amount of time in hours required for the alarm (most commonly being half an hour).

Example 1:

The panel has 50 devices each consuming 250µA each, 15 sounders at 8mA each, the required standby time is 24 hours, and the required alarm time is 0.5 hours.

Z = 50 x 0.00025 = 0.0125A

P = 0.042A

A = 15 x 0.008= 0.12A

H = 24

T = 0.5

Standby Time in Ah = 1.25 x [(0.5 x 0.12) + 24 x (0.0125 + 0.042)] = 1.71Ah

Therefore, batteries with at least 1.71Ah capacity are required.

Example 2:

The panel has 100 devices each consuming 250µA each, 40 sounders at 20mA each connected to the panel sounder circuits, the required standby time is 24 Hours, and the required alarm time is 0.5 hours.

Z= 100 x 0.00025 = 0.025A

P = 0.042A

A = 40 x 0.02 = 0.8A

H = 24

T = 0.5

Standby Time in Ah = 1.25 x [(0.5 x 0.8) + 24 x (0.025 + 0.042)] = 2.51Ah

Therefore, batteries with at least 2.51Ah capacity are required.

TECHNICAL SPECIFICATION

POWER SUPPLY SPECIFICATION

Mains supply	230V a.c. 50/60Hz. Max. current 350mA
Internal Power Supply	27 V d.c Nominal (Ripple voltage 250mV)
Total output current limited to	1.4A @ 230 V a.c.
Power rating	Imax. a = 210mA; Imin = 40 mA
Maximum internal battery resistance	Ri max. = 1.1Ω
Supply and battery charger monitored for failure	Yes
Batteries monitored for disconnection and failure	Yes
Batteries protected against deep discharge	Yes
Max. battery size and type	3.2Ah VRLA. Use 2 x YUASA NP3.2-12 for LPCB approved systems
Quiescent current drain (1 loop unloaded)	< 50mA
Earth fault monitoring	Yes (any conductor)
Temperature compensated charging	Yes

LOOP DRIVER SPECIFICATION

Number of loop drivers	1
Line monitored for open and short circuit faults	Yes
On-board loop isolators with LED indication when active	Yes
Auto-polling from each loop end	Yes
Max. output current per loop	500mA (Voltage: 25 V minimum; 34 V maximum)
Max. number of addressable devices	126
Max. number of loop powered sounders per loop @ 10mA	40
Number of programmable sounder groups	16
Number of programmable output sets	16

CONVENTIONAL SOUNDER CIRCUIT SPECIFICATION

Number of programmable circuits	2
End of line resistor value	6800 ohm 5% Tol. 0.25 W
Line monitored for open and short circuit faults	Yes
Outputs fused at	400mA. Protected by resettable overload circuit
Output voltage	19.5 V minimum; 28 V maximum
Max. number of sounders @ 20mA	40

AUXILIARY OUTPUTS

Type	Relay voltage free single pole changeover
Max. switching current	1A
Max. switching voltage	30 V d.c.
Relay 1 / Relay 2 / Relay 3	Programmed from cause and effect
Fault	Active when no faults are present
'24V' Aux. power output	19.5 V minimum, 28 V maximum. Max current 100mA. Protected by resettable overload circuit

AUXILIARY INPUTS

Input 1	Connect to 0V to trigger, Max. input voltage 27V d.c (non-latching). Programmed from cause & effect
Input 2	Connect to 0V to trigger, Max. input voltage 27V d.c (non-latching). Programmed from cause & effect

FUSES (to IEC - EN60127 Pt2)

Mains fuse	1A HRC Ceramic 20mm
Battery fuse	1.6A F 20mm. This limits the current drawn from the battery

PANEL INDICATORS AND CONTROLS

Control buttons	Menu, More Information, Silence Internal Sounder, Control Panel Reset, Investigate, Resound
Event scrolling and menu access buttons	Up ▲ (1), Down ▼ (3), Accept ▶ (2), Escape ◀ (4)
Liquid crystal display	Two lines x 40 characters, backlit
Number of zonal LED indicators	16
Other LED indicators	(General) Fire, Supply Present, Test, Accessed, General Disablement, Phased Evacuation, General Fault, Power Supply Fault, System Fault, Sounder Status, Delays Running.

PHYSICAL DIMENSIONS

Approx. dimensions of panel (W x H x D)	380 x 235 x 90mm (plastic)
Approx. weight (without batteries)	1.8kg

CABLING REQUIREMENTS

Type of cable	Fire resistant screened cable, minimum size 1mm^2
Max. cable length per loop	1 KM
Connector blocks	Plug-on type, largest acceptable conductor size, 1.5mm^2
Max. allowable loop impedance (each conductor)	20 ohm
Max. cable capacitance	.27µF

NETWORK SPECIFICATION

Connection	Via CFP761 network driver fitted at main panel
Max. no of main panels per network	8
Max. no of repeaters per non-networked master panel	8
Max. cable length per network	1 KM (main panel network); 500m (repeater network)

PC/PRINTER INTERFACE

PC connection	Via main panel RS232 molex connector (lead supplied in XFP507 upload/download software kit)
Printer connection	Not applicable

OPERATING CONDITIONS

The components are selected to operate within their specification when the environmental conditions outside the enclosure comply with class 3k5 of IEC 721-3-3 : 1978.
Temperature range: -5 to +40°C. Maximum relative humidity: 95%